On the equivalence of parabolic Harnack inequalities and heat kernel estimates

Martin T. Barlow*
Department of Math.
University of British Columbia
Vancouver V6T 1Z2, Canada

Alexander Grigor'yan†
Department of Math.
University of Bielefeld
33501 Bielefeld, Germany

Takashi Kumagai‡
RIMS
Kyoto University
Kyoto 606-8502, Japan

3 March 2011

Abstract

We prove the equivalence of parabolic Harnack inequalities and sub-Gaussian heat kernel estimates in a general metric measure space with a local regular Dirichlet form.

Key Words and Phrases. Harnack inequality, heat kernel estimate, caloric function, metric measure space, volume doubling, Dirichlet space
Short title. Parabolic Harnack inequalities and heat kernel estimates
2010 Mathematics Subject Classification. Primary 58J35; Secondary 60J35, 31C25.

Contents

1 Introduction **2**

2 Framework and background material **5**
2.1 General setup 5
2.2 Caloric functions 6

*Research partially supported by NSERC (Canada)
†Research partially supported by SFB 701 of the German Research Council (DFG)
‡Research partially supported by the Grant-in-Aid for Scientific Research (B) 22340017 (Japan)

3 Main result **9**
3.1 The Harnack inequality 9
3.2 The statement of the main result 11

4 Proof of Theorem 3.1 **12**
4.1 Proof of $(a) \Rightarrow (b)$ (w-HKE implies w-LLE) 12
4.2 Proof of $(b) \Rightarrow (c)$ (w-LLE implies w-PHI) 15
4.2.1 Oscillation inequality and the Hölder continuity 15
4.2.2 Obtaining the Harnack inequality 19
4.3 Proof of $(c) \Rightarrow (a)$ (w-PHI implies w-HKE) 24
4.3.1 A technical lemma 24
4.3.2 Oscillation inequality and the Hölder continuity 25
4.3.3 Existence of the heat kernel and on-diagonal upper bound . . 27
4.3.4 Near diagonal lower bound 31
4.3.5 Integrated upper bound 35
4.3.6 Pointwise off-diagonal upper bound 38

5 Proof of Theorem 3.2 **40**

6 Example **44**

1 Introduction

The classical Harnack inequality says that if u is a non-negative harmonic function in a ball $B(x,R)$ in $\mathbb{R}^n$ then

$$\sup_{B\left(x,\frac{1}{2}R\right)} u \leq C \inf_{B\left(x,\frac{1}{2}R\right)} u$$

where the constant C depends only on n. The same inequality holds for solutions of a uniformly elliptic equation

$$Lu := \sum_{i,j=1}^{n} \frac{\partial}{\partial x_i}\left(a_{ij}(x)\frac{\partial u}{\partial x_j}\right) = 0$$

where now the constant C depends only on n and on the ellipticity constant of the operator L. The Harnack inequality has proven to be a powerful tool in analysis of elliptic PDEs. For example, it can be used to obtain the Hölder continuity of solutions, convergence properties of sequences of solutions, estimates of fundamental solutions, boundary regularity, etc.

A *parabolic* version of the Harnack inequality, which was discovered by Hadamard, says that if $u = u(t,x)$ is a non-negative solution of the heat equation $\frac{\partial u}{\partial t} = \Delta u$ in a cylinder $(0,T) \times B(x,R)$ where $T = R^2$, then

$$\sup_{\left(\frac{1}{4}T,\frac{1}{2}T\right)\times B\left(x,\frac{1}{2}R\right)} u(t,x) \leq C \inf_{\left(\frac{3}{4}T,T\right)\times B\left(x,\frac{1}{2}R\right)} u(t,x), \tag{1.1}$$

where again C depends only on n. By a theorem of Moser [29], the same inequality holds also for solutions of the parabolic equation $\frac{\partial u}{\partial t} = Lu$ where the constant C depends in addition on the ellipticity constant of L (here the coefficients of L are allowed to depend on t as well). A spectacular application of Moser's Harnack inequality was the proof by Aronson [1] of the Gaussian estimates of the heat kernel $p_t(x,y)$ of the equation $\frac{\partial u}{\partial t} = Lu$:

$$\frac{C_2}{t^{n/2}} \exp\left(-c_2 \frac{|x-y|^2}{t}\right) \leq p_t(x,y) \leq \frac{C_1}{t^{n/2}} \exp\left(-c_1 \frac{|x-y|^2}{t}\right). \tag{1.2}$$

To be more precise, the Harnack inequality was used in [1] to prove the lower bound in (1.2), while the upper bound was obtained using an additional argument. Even earlier Littman, Stampaccia and Weinberger [27] used the elliptic Harnack inequality of Moser to obtain estimates of fundamental solution of the operator L. It was first observed by Landis that conversely, if one had proper two sided estimates of the fundamental solution of L then one could deduce the Harnack inequality, although in a highly elaborate manner. The argument of Landis was further developed by Krylov and Safonov [24] in the context of parabolic equations, and then was brought by Fabes and Stroock [11] to a final, transparent form.

In the meantime, the development of analysis on Riemannian manifold raised similar questions in the geometric context. Let now Δ be the Laplace-Beltrami operator on a complete non-compact Riemannian manifold X. Then one can consider the associated Laplace equation $\Delta u = 0$ and heat equation $\frac{\partial u}{\partial t} = \Delta u$ and ask the same questions as above. It was quickly realized that the Harnack inequalities and heat kernel bounds require quite strong restrictions on the geometry of the manifold. The questions above are transformed in the context of the heat equation as follows: under what geometric hypotheses can one obtain analogues of the parabolic Harnack inequality (1.1) and the heat kernel bounds (1.2) on Riemannian manifold and whether these two properties are equivalent? The first breakthrough result in this direction is the following estimate of Li and Yau [26]: if the Ricci curvature of X is non-negative then the heat kernel $p_t(x,y)$ admits the bounds

$$p_t(x,y) \asymp \frac{C}{V\left(x,\sqrt{t}\right)} \exp\left(-c\frac{d^2(x,y)}{t}\right) \tag{1.3}$$

where $d(x,y)$ is the geodesic distance, $V(x,r)$ is the Riemannian volume of the geodesic ball $B(x,r)$, and $\asymp$ means that both inequalities with $\leq$ and $\geq$ take place but possibly with different values of positive constants C, c. In fact, Li and Yau proved the uniform Harnack inequality (1.1) for solutions of the heat equations on X, and then used it to obtain (1.3) as in Aronson's proof. Similar estimates for certain unbounded domains in $\mathbb{R}^n$ with Neumann boundary conditions were obtained by a different method by Gushchin [20].

An analysis of the arguments of Fabes and Stroock [11] and Aronson [1] shows the following:

1. If the killed heat kernel on X satisfies the lower bound

$$p_t^{B(x_0,R)}(x,y) \geq \frac{c}{V\left(x_0,\sqrt{t}\right)} \quad \text{for all } x,y \in B\left(x_0,\varepsilon\sqrt{t}\right) \tag{1.4}$$

for all $x_0 \in X$ and $0 < t \leq \varepsilon R^2$, for some positive constants ε, c, then the Harnack inequality (1.1) holds.

2. If the Harnack inequality (1.1) holds then also the estimates (1.3) are satisfied.

It is not difficult to show that (1.3) implies (1.4). Hence, we obtain the equivalence

$$(1.1) \Leftrightarrow (1.3) \Leftrightarrow (1.4). \tag{1.5}$$

Note that the proof of the equivalence (1.5) requires also the following general properties of Riemannian manifolds:

(a) For any $y \in X$, the function $f(x) = d(x, y)$ has its gradient bounded by 1, that is, $|\nabla f| \leq 1$. (This is used to obtain the upper bound in (1.3))

(b) For any couple $x, y \in X$, there is a geodesic connecting x and y. (This is used to obtain the lower bound in (1.3)).

During the past two decades the study of heat kernels and Harnack inequalities has gained a new momentum from analysis on fractals and more general metric measure spaces. Let (X, d) be a locally compact metric space and μ be a Radon measure on X with full support. We refer to the triple (X, d, μ) as a metric measure space. As it was shown in [7], [4], [12] various classes of fractals (X, d, μ) admit a natural Laplace operator, whose heat kernel satisfies the following estimates

$$p_t(x, y) \asymp \frac{C}{t^{\alpha/\beta}} \exp\left(-c\left(\frac{d^\beta(x, y)}{t}\right)^{\frac{1}{\beta-1}}\right), \tag{1.6}$$

where $\alpha > 0$ and $\beta > 1$ are positive parameters. In fact, α is the Hausdorff dimension of (X, d), and is also the exponent of the volume growth function, that is,

$$\mu(B(x, r)) \asymp Cr^\alpha \tag{1.7}$$

where $B(x, r)$ is the metric ball of d. The parameter β is called the walk dimension of the associated diffusion process; one has always $\beta \geq 2$. The Harnack inequality (1.1) is also satisfied on such spaces, although the relation between the time and space dimensions T and R has to be changed to $T = R^\beta$.

Under the assumptions that (X, d) is a length space and the heat kernel on X is a continuous function, it was shown by Hebisch and Saloff-Coste [22], that the Harnack inequality with $T = R^\beta$ is equivalent to the following heat kernel estimates:

$$p_t(x, y) \asymp \frac{C}{V(x, t^{1/\beta})} \left(-c\left(\frac{d^\beta(x, y)}{t}\right)^{\frac{1}{\beta-1}}\right), \tag{1.8}$$

where $V(x, r) = \mu(B(x, r))$. It is clear that under the condition (1.7), the estimate (1.8) is the same as (1.6).

The purpose of this paper is to study the equivalence of the heat kernel estimates and Harnack inequalities in a general setting without additional assumption on the

metric d, and without the continuity of the heat kernel. In particular we do not assume that d is a geodesic metric. Our main result is an analogue of the equivalence (1.5) in a general setup. Our weaker hypotheses makes our arguments much more technical but in return allows much more flexibility in applications. We remark that typically the continuity of the heat kernel cannot be established a priori. To deduce the Harnack inequality from the heat kernel estimates, we use a modification of the argument of Fabes and Stroock [11]. To obtain heat kernel estimates from the Harnack inequality, we use the following.

- For the on-diagonal upper bound – an adaptation of the argument of Aronson [1], although the singularity of the setting requires much more work.
- For the lower bounds – a new argument, based on [9], which allows one to avoid gluing solutions in time as in [1].
- For the off-diagonal upper bounds – a modification of the argument of Hebisch and Saloff-Coste [22]. Note that the classical argument of Aronson does not work because the estimate $|\nabla d| \leq 1$ is no longer true.

We do not touch here on the interesting question of deducing either the Harnack inequality or the heat kernel bounds from some simpler properties, and refer the reader to [6], [14], [31], [32] and references therein.

Finally, note that there are various examples of distances that are not geodesic. For example, the resistance metric that gives an effective resistance between two points is an important metric for the heat kernel estimates for diffusions on fractals (see for example [21]), and the external metric is often useful for global analysis on metric spaces (see Fig. 11 in Section 6 where 2-dimensional Riemannian manifold X is embedded in $\mathbb{R}^3$; the external metric is then the Euclidean metric on $\mathbb{R}^3$).

2 Framework and background material

2.1 General setup

Let (X, d) be a locally compact complete separable metric space. Let μ be a Borel measure on X with full support, that is, $0 < \mu(\Omega) < \infty$ for every non-void open set $\Omega \subset X$. We will refer to such a triple (X, d, μ) as a *metric measure space*.

Let $(\mathcal{E}, \mathcal{F})$ be a regular strongly local Dirichlet form on $L^2(X, \mu)$. The regularity means that the intersection $\mathcal{F} \cap C_0(X)$ is dense both in $\mathcal{F}$ and $C_0(X)$, where the latter is the space of all compactly supported continuous functions on X with sup-norm, and the norm of $\mathcal{F}$ is given by the inner product $(f, g) + \mathcal{E}(f, g)$. The strong locality means that $\mathcal{E}(u, v) = 0$ whenever u, v are functions from $\mathcal{F}$ with compact supports such that $u = \text{const}$ in an open neighborhood of $\operatorname{supp} v$. We refer to the quadruple $(X, d, \mu, \mathcal{E})$ as a *metric measure Dirichlet space*. For any open set $\Omega \subset X$, $\mathcal{F}_\Omega$ is defined as the closure in $\mathcal{F}$ of the set of all functions from $\mathcal{F}$ that are compactly supported in Ω. It is known that $(\mathcal{E}, \mathcal{F}_\Omega)$ is a regular strongly local Dirichlet form on $L^2(\Omega, \mu)$ (see [13, Section 4.4]).

Denote by $\mathcal{L}$ the (negative definite) generator of $\mathcal{E}$, which is a self-adjoint operator in L^2 such that

$$\mathcal{E}(f,g) = -(\mathcal{L}f, g)_{L^2}$$

for all $f \in \operatorname{dom}(\mathcal{L})$ and $g \in \mathcal{F}$. Let $\{P_t\}_{t\geq 0}$ be the heat semigroup of the form $(\mathcal{E}, \mathcal{F})$, that is, $P_t = e^{t\mathcal{L}}$ where $e^{t\mathcal{L}}$ is defined by the spectral theory as an operator in L^2.

For any open set $\Omega \subset X$, denote by $\mathcal{L}^\Omega$ the generator $(\mathcal{E}, \mathcal{F}_\Omega)$ and by $\left\{P_t^\Omega\right\}_{t\geq 0}$ the associated heat semigroup. Let $Y = \left(\{Y_t\}_{t\geq 0}, \{\mathbb{P}^x\}_{x\in X}\right)$ be the Hunt process associated with the Dirichlet form $(\mathcal{E}, \mathcal{F})$ (see [13, Theorem 7.2.1]). Since $\mathcal{E}$ is strongly local, by [13, Theorem 7.2.2] Y is a diffusion.

For example, for Brownian motion in $\mathbb{R}^d$, we have

$$\mathcal{E}(f,g) = \frac{1}{2}\int_{\mathbb{R}^d} (\nabla f, \nabla g)\, dx,$$

$\mathcal{F} = W^1\left(\mathbb{R}^d\right)$, and $\mathcal{L} = \Delta/2$ with domain $\operatorname{dom}(\mathcal{L}) = \{f \in \mathcal{F} : \Delta f \in L^2\}$.

2.2 Caloric functions

We need to define what it means that a function $u(t,x)$ is a caloric function in a cylinder $I \times \Omega$, where I is an interval in $\mathbb{R}$ and Ω is an open subset of X. In the classical case of analysis in $\mathbb{R}^n$, a caloric function $u(t,x)$ is a solution of the heat equation $\frac{\partial u}{\partial t} = \Delta u$. In the abstract setting there are various definitions; for our purposes, any definition will do as long as it satisfies the following properties:

1. The set of all caloric functions in $I \times \Omega$ is a linear space over $\mathbb{R}$.
2. If $I' \subset I$ and $\Omega' \subset \Omega$ then any caloric function in $I \times \Omega$ is also a caloric function in $I' \times \Omega'$.
3. For any $g \in L^2(\Omega, \mu)$, the function $(t,x) \mapsto P_t^\Omega g(x)$ is a caloric function in $\mathbb{R}_+ \times \Omega$.
4. If Ω is relatively compact then a constant function in Ω is the restriction to Ω of a time independent caloric function in $\mathbb{R}_+ \times \Omega$.
5. (*Super-mean value inequality*) For any non-negative caloric function $u(t,x)$ in $\mathbb{R}_+ \times \Omega$, the following inequality holds: $u(t,\cdot) \geq P_{t-s}^\Omega u(s,\cdot)$ for all $0 < s < t$. (We remark that when we write inequalities of this kind, we intend them to be for functions in $L^2(X,\mu)$ rather than pointwise.)

We now give one definition of caloric functions that satisfies all these requirements. Write for simplicity $L^2 = L^2(X,\mu)$, and let I be an interval in $\mathbb{R}$. We say that a function $u : I \to L^2$ is *weakly differentiable* at $t_0 \in I$ if for any $f \in L^2$, the function $(u(t), f)$ is differentiable at t_0 (where the brackets stand for the inner product in L^2), that is, the limit

$$\lim_{t\to t_0}\left(\frac{u(t) - u(t_0)}{t - t_0}, f\right)$$

exists. By the principle of uniform boundedness, in this case there is a function $w \in L^2$ such that

$$\lim_{t \to t_0} \left(\frac{u(t) - u(t_0)}{t - t_0}, f \right) = (w, f)$$

for all $f \in L^2$. We refer to the function w as the *weak derivative* of the function u at t_0 and write $w = u'(t_0)$. Of course, we have the weak convergence

$$\frac{u(t) - u(t_0)}{t - t_0} \rightharpoonup u'(t_0).$$

Similarly, one can introduce the strong derivative of u if $\frac{u(t)-u(t_0)}{t-t_0}$ converges to $u'(t_0)$ in the norm topology of L^2.

Definition. Consider a function $u : I \to \mathcal{F}$, and let Ω be an open subset of X. We say that u is a *subcaloric* function in $I \times \Omega$ if u is weakly differentiable in the space $L^2(\Omega)$ at any $t \in I$ and, for any non-negative $f \in \mathcal{F}_\Omega$ and for any $t \in I$,

$$(u', f) + \mathcal{E}(u, f) \leq 0. \tag{2.1}$$

Equivalently, u is subcaloric if (u, f) is differentiable in $t \in I$ for any $f \in L^2(\Omega)$, and

$$(u, f)' + \mathcal{E}(u, f) \leq 0 \text{ for any } f \in \mathcal{F}_\Omega. \tag{2.2}$$

Similarly one defines the notions of supercaloric functions and caloric functions; for the latter the inequalities (2.1) and (2.2) become equalities.

Clearly, the properties 1 and 2 above are satisfied. In what follows, we check $3 - 5$.

Example 2.1 (i) Let us verify that, for any $g \in L^2(\Omega, \mu)$, the function $u(t, \cdot) = P_t^\Omega g$ is a caloric function in $\mathbb{R}_+ \times \Omega$. Note first that $u(t, \cdot) \in \mathcal{F}_\Omega \subset \mathcal{F}$. Next, let $\{E_\lambda\}$ be the spectral resolution of $-\mathcal{L}^\Omega$. Then we have, for any $f \in L^2(\Omega)$,

$$(u(t, \cdot), f) = \left(P_t^\Omega g, f\right) = \int_0^\infty e^{-\lambda t} d(E_\lambda g, f)$$

whence, for any $t > 0$,

$$(u(t, \cdot), f)' = -\int_0^\infty \lambda e^{-\lambda t} d(E_\lambda g, f)$$

(the integral in the right hand side converges locally uniformly in $t > 0$ because the function $\lambda \mapsto \lambda e^{-\lambda t}$ is bounded). On the other hand, for any $f \in \mathcal{F}_\Omega$, we have

$$\mathcal{E}(u(t, \cdot), f) = -\left(\mathcal{L}^\Omega P_t^\Omega g, f\right) = -\left((\mathcal{L}^\Omega e^{t\mathcal{L}^\Omega})g, f\right) = \int_0^\infty \lambda e^{-\lambda t} d(E_\lambda g, f),$$

whence

$$(u, f)' + \mathcal{E}(u, f) = 0, \tag{2.3}$$

that is, u is a caloric function.

(ii) Let Ω be relatively compact. Then there is a cutoff function of Ω, that is, a function $u \in C_0(X) \cap \mathcal{F}$ such that $u \equiv 1$ in a neighborhood of $\overline{\Omega}$. We claim that the function $(t,x) \mapsto u(x)$ is caloric in $\mathbb{R} \times \Omega$. Indeed, any $f \in C_0(\Omega) \cap \mathcal{F}$ we have $\mathcal{E}(u,f) = 0$ by the strong locality, and this identity extends by continuity to all $f \in \mathcal{F}_\Omega$. Since $u' = 0$, the equation (2.3) is trivially satisfied, so that $u(x)$ is a time independent caloric function in $\mathbb{R} \times \Omega$.

The following maximum principle was proved in [18] (see also [15] for the case of the strong time derivative). For any real a, set $a_+ = \max(a, 0)$.

Lemma 2.2 *Fix $T \in (0,\infty]$, an open set $\Omega \subset X$, and let $u : (0,T) \to \mathcal{F}$ be a subcaloric function in $(0,T) \times \Omega$. Assume in addition that u satisfies the boundary condition*

$$u_+(t,\cdot) \in \mathcal{F}_\Omega \ \text{ for all } t \in (0,T) \tag{2.4}$$

and the initial condition

$$u_+(t,\cdot) \overset{L^2(\Omega)}{\longrightarrow} 0 \text{ as } t \to 0.$$

Then $u_+ = 0$ in $(0,T) \times \Omega$, so that $u \le 0$ in $(0,T) \times \Omega$.

Remark. The condition (2.4) can be verified in applications using the following result from [15]: if $u \in \mathcal{F}$ and $u \le v$ for some $v \in \mathcal{F}_\Omega$ then $u_+ \in \mathcal{F}_\Omega$.

Finally, we can establish the super-mean value inequality.

Corollary 2.3 *Let $f \in L^2_+(\Omega)$ and u be a non-negative supercaloric function in $(0,T) \times \Omega$ such that $u(t,\cdot) \overset{L^2(\Omega)}{\longrightarrow} f$ as $t \to 0$. Then, for any $t \in (0,T)$,*

$$u(t,\cdot) \ge P_t^\Omega f \quad \text{in } \Omega. \tag{2.5}$$

In particular, for all $0 < s < t < T$,

$$u(t,\cdot) \ge P_{t-s}^\Omega u(s,\cdot) \ \text{ in } \Omega. \tag{2.6}$$

Proof. Consider the function $v = P_t^\Omega f - u$, which by property 2 above is a weak subsolution in $(0,T) \times \Omega$. Since $f \in L^2$,

$$v(t,\cdot) \overset{L^2(\Omega)}{\longrightarrow} 0 \text{ as } t \to 0$$

and, for any $t > 0$,

$$v(t,\cdot) \le P_t^\Omega f.$$

Since $P_t^\Omega f \in \mathcal{F}_\Omega$, we conclude by the Remark above that $v_+ \in \mathcal{F}_\Omega$. By Lemma 2.2, we obtain $v \le 0$, which proves (2.5). Inequality (2.6) follows from (2.5) with $f = u(s,\cdot)$. ■

We note that an alternative approach to define caloric functions and develop a parabolic potential theory is via time dependent Dirichlet forms. Such forms can be defined by integrating time derivatives of space-time functions and the original

Dirichlet forms over the time variable. Roughly speaking, for a parabolic cylinder $Q := I \times B(x_0, R)$, $u(t,x) : Q \to \mathbb{R}$ is a caloric function in Q if

$$\int_J \Big[\int f(t,x)u'(t,x)\mu(dx) + \mathcal{E}(f(t,\cdot), u(t,\cdot)) \Big] dt = 0,$$

for all compact subinterval $J \subset I$ and $f : I \times X \to \mathbb{R}$ so that $f(t,\cdot)$ has compact support in $B(x_0, R)$ for a.e. $t \in I$. Time dependent Dirichlet forms are no longer symmetric and time derivatives should be considered in the distribution sense. We do not pursue this approach here, but remark that there is are unpublished lecture notes [30] that discuss the theory of time dependent Dirichlet forms.

3 Main result

Consider metric balls

$$B(x,R) = \{y : d(x,y) < R\},$$

and set

$$V(x,R) = \mu(B(x,R)).$$

We assume in the sequel that all balls $B(x,R)$ are relatively compact for all $x \in X$ and $R > 0$. In particular, the function $V(x,R)$ is finite and positive. For any $x \in X$ and $T, R > 0$, we define the cylinder

$$Q(x,T,R) = (0,T) \times B(x,R)$$

as a subset of $\mathbb{R} \times X$.

3.1 The Harnack inequality

We introduce here the Harnack inequality and other necessary properties for caloric functions on metric measure Dirichlet spaces. Let $\tau : (0,\infty) \to (0,\infty)$ be a continuous strictly increasing bijection that satisfies the following property: there exist $1 < \beta_1 \le \beta_2 < \infty$ and $C > 0$ such that, for all $0 < r \le R < \infty$,

$$C^{-1} \left(\frac{R}{r}\right)^{\beta_1} \le \frac{\tau(R)}{\tau(r)} \le C \left(\frac{R}{r}\right)^{\beta_2}. \tag{3.1}$$

It follows that the inverse function τ^{-1} satisfies the following condition: for all $0 < t \le T < \infty$,

$$\left(\frac{T}{Ct}\right)^{1/\beta_2} \le \frac{\tau^{-1}(T)}{\tau^{-1}(t)} \le \left(\frac{CT}{t}\right)^{1/\beta_1}. \tag{3.2}$$

Definitions. We say that a metric measure Dirichlet space X satisfies the *weak parabolic Harnack inequality with the rate function* τ (for short w-PHI(τ)) if there exist constants $0 < C_1 < C_2 < C_3 < C_4$, $C_5 > 1$ and $C_6 > 0$ such that, for any

non-negative bounded caloric function $u(t,x)$ in any cylinder $Q(x_0, \tau(C_4R), C_5R)$, the following inequality is satisfied

$$\operatorname*{ess\,sup}_{Q_-} u \leq C_6 \operatorname*{ess\,inf}_{Q_+} u, \tag{3.3}$$

where

$$Q_+ \ := (\tau(C_3R), \tau(C_4R)) \times B(x_0, R) \tag{3.4}$$
$$Q_- \ := (\tau(C_1R), \tau(C_2R)) \times B(x_0, R). \tag{3.5}$$

(See Fig. 1).

We say that X satisfies the *strong parabolic Harnack inequality with the rate function* τ (shortly, s-PHI(τ)) if, for any choice of constants $0 < C_1 < C_2 < C_3 < C_4$ and $C_5 > 1$, there exists $C_6 = C_6\,(C_1, ..., C_5) > 0$ such that w-PHI(τ) holds with this set of constants.

It is immediate that s-PHI(τ) implies w-PHI(τ). The difference between these strong and weak PHI is one of the main topics of this paper. We remark that this difference has not been remarked on before since in the classical situation when $\tau(t) = t^2$ (or t^β with $\beta > 2$) and the metric is geodesic, a standard chaining argument shows that w-PHI(τ) implies s-PHI(τ). See Theorem 3.2 below for a generalization of this to τ satisfying (3.1).

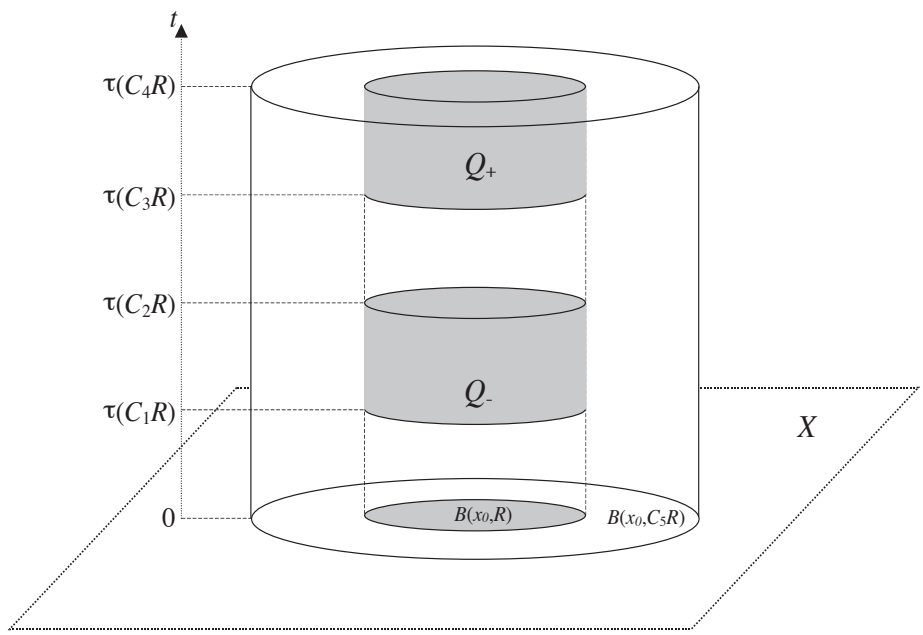

Figure 1: Cylinders Q_+ and Q_-

In the following definitions we use the parameters β_1 and β_2 from (3.1). Also, τ^{-1} denotes the inverse function of the τ.

Definitions. (i) We say that X satisfies HKE$(\tau;\varepsilon)$, where $\varepsilon \in (0,\infty)$ is a parameter, if $\{P_t\}$ possesses a transition density $p_t(x,y)$ that satisfies the following inequalities:

$$p_t(x,y) \le \frac{c_1}{V(x,\tau^{-1}(t))} \exp\left(-c_2 \left(\frac{\tau(d\,(x,y))}{t}\right)^{1/(\beta_2-1)}\right) \tag{3.6}$$

for all $t>0$ and $\mu\times\mu$-almost all $(x,y)\in X\times X$, and

$$p_t(x,y) \ge \frac{c_3}{V(x,\tau^{-1}(t))}, \tag{3.7}$$

for all $t>0$ and $\mu\times\mu$-almost all $(x,y)\in X\times X$ with

$$d(x,y) \le \varepsilon\tau^{-1}(t), \tag{3.8}$$

where $c_1, c_2, c_3 = c_3(\varepsilon)$ are positive constants.
(ii) We say that X satisfies w-HKE(τ) if HKE$(\tau;\varepsilon)$ is satisfied for some $\varepsilon>0$.
(iii) We say that X satisfies s-HKE(τ) if HKE$(\tau;\varepsilon)$ is satisfied for all $\varepsilon\in(0,\infty)$.
(iv) We say that X satisfies f-HKE(τ) if $\{P_t\}$ possesses the transition density $p_t(x,y)$ that satisfies (3.6) and the lower bound

$$p_t(x,y) \ge \frac{c_3}{V(x,\tau^{-1}(t))} \exp\left(-c_4 \left(\frac{\tau(d\,(x,y))}{t}\right)^{1/(\beta_2-1)}\right), \tag{3.9}$$

for all $t>0$ and $\mu\times\mu$-almost all $x,y\in X$.
(v) We say that X satisfies LLE$(\tau;\varepsilon)$, where $\varepsilon\in(0,1)$ is a parameter, if for all $x_0\in X$ and $R>0$, there exists a transition density $p_t^{B(x_0,R)}(x,y)$ of $\{P_t^{B(x_0,R)}\}$ that satisfies the estimate

$$p_t^{B(x_0,R)}(x,y) \ge \frac{c_5}{V(x_0,\tau^{-1}(t))}, \tag{3.10}$$

for all $0<t\le\tau(\varepsilon R)$ and μ-almost all $x,y\in B(x_0,\varepsilon\tau^{-1}(t))$, with some positive constant c_5.
(vi) We say that X satisfies w-LLE(τ) if LLE$(\tau;\varepsilon)$ is satisfied for some $\varepsilon\in(0,1)$.
(vii) We say that X satisfies s-LLE(τ) if LLE$(\tau;\varepsilon)$ is satisfies for all $\varepsilon\in(0,1)$.

Here the abbreviation 'HK' stands for 'heat kernel' estimates, 'w-' stands for 'weak', 's-' stands for 'strong', 'f-' stands for 'full', and LLE stands for 'local lower estimate'.

3.2 The statement of the main result

We say that a metric measure space (X,d,μ) satisfies the volume doubling property VD, if there exists a constant C such that

$$V(x,2R) \le CV(x,R) \quad \text{for all } x\in X,\ R>0. \tag{VD}$$

It is easy to see that VD implies the following; there exist $C_{\mathrm{VD}},\gamma>0$ such that

$$V(x,R) \le C_{\mathrm{VD}} V(y,r)\left(\frac{d(x,y)+R}{r}\right)^{\gamma}, \quad \text{for all } \ x,y\in X, 0<r\le R. \tag{3.11}$$

Our main result is as follows.

Theorem 3.1 *Let $(X, d, \mu, \mathcal{E})$ be a metric measure Dirichlet space and assume that all metric balls are relatively compact and* VD *is satisfied. Then the following conditions are equivalent:*
(a) X satisfies w-HKE(τ).
(b) X satisfies w-LLE(τ).
(c) X satisfies w-PHI(τ).

Let us emphasize that in this paper we never assume that $(\mathcal{E}, \mathcal{F})$ is conservative.

We say that a metric space (X, d) is geodesic if, for any couple $x, y \in X$, there exists a (not necessarily unique) geodesic path, that is, a continuous path connecting the points x, y and such that, for any point z on this path, $d(x, z) + d(z, y) = d(x, y)$. The following statement refines Theorem 3.1 in the case of a geodesic space.

Theorem 3.2 *Let $(X, d, \mu, \mathcal{E})$ be a metric measure Dirichlet space and assume that all metric balls are relatively compact and the metric is geodesic. Assume also that the function τ satisfies the condition*[1]

$$\left(\frac{R}{r}\right)^{\beta_1} \leq \frac{\tau(R)}{\tau(r)} \leq C \left(\frac{R}{r}\right)^{\beta_2}, \quad 0 < r \leq R. \tag{3.12}$$

The following are equivalent:
(a) *X satisfies* s-HKE(τ).
(a') *X satisfies* VD *and* w-HKE(τ).
(a'') *X satisfies* f-HKE(τ).
(b) *X satisfies* VD *and* s-LLE(τ).
(b') *X satisfies* VD *and* w-LLE(τ).
(c) *X satisfies* s-PHI(τ).
(c') *X satisfies* w-PHI(τ).

Remark. Theorem 3.2 shows that s-LLE, s-HKE and s-PHI are equivalent provided the metric d is geodesic. Without the latter assumption the statement of Theorem 3.2 is not true in general. See Section 6 for an example of a space that satisfies s-HKE but neither s-PHI nor s-LLE.

4 Proof of Theorem 3.1

4.1 Proof of $(a) \Rightarrow (b)$ (w-HKE implies w-LLE)

We prove here that VD + w-HKE$(\tau; \varepsilon)$ implies w-LLE(τ). Let us first show that the heat semigroup P_t^B possesses the heat kernel for any ball $B = B(x_0, R)$. Indeed, by

[1] Note that (3.12) is stronger than (3.1) since the coefficient in the left hand side inequality is 1 rather than C^{-1}.

the upper bound (3.6) and (3.11) we have

$$\operatorname*{ess\,sup}_{x,y\in B} p_t(x,y) \le \sup_{x\in B} \frac{c_1}{V(x,\tau^{-1}(t))} \le \frac{c_1'}{V(x_0,r)} \left(\frac{2R}{\tau^{-1}(t)}\right)^{\gamma} =: F(t). \tag{4.1}$$

Therefore, for any non-negative function $f \in L^1(B)$ and μ-almost all $x \in B$,

$$P_t^B f(x) \le P_t f(x) = \int_B p_t(x,y) f(y)\, d\mu(y) \le F(t) \|f\|_{L^1}.$$

Hence, the semigroup P_t^B is $L^1 \to L^\infty$ ultracontractive, which implies the existence of the heat kernel p_t^B (see [5], [8], [10], [16]).

By [15, Lemma 4.18], for any open set $U \subset X$ and any compact set $K \subset U$, for any non-negative function $f \in L^2(X,\mu)$ and any $t > 0$, the following holds.

$$P_t f(x) \le P_t^U f(x) + \sup_{s\in[0,t]} \operatorname*{ess\,sup}_{K^c} P_s f, \tag{4.2}$$

for μ-almost all $x \in X$. Let us apply this inequality with $U = B := B(x_0,R)$ and $K = \overline{B(x_0,R/2)}$. Fix some $0 < r < R/4$ to be specified later on, set $A = B(x_0,r)$ and let f be a non-negative function from $L^1(A)$. We have

$$\sup_{s\in[0,t]} \operatorname*{ess\,sup}_{z\in K^c} P_s f(z) = \sup_{s\in(0,t]} \operatorname*{ess\,sup}_{z\in K^c} \int_A p_s(z,y) f(y)\, d\mu(y) \le M\|f\|_{L^1},$$

where

$$M := \sup_{s\in(0,t]} \operatorname*{ess\,sup}_{z\in K^c,\, y\in A} p_s(z,y) \tag{4.3}$$

(note that the value $s = 0$ can be dropped from $\sup_{s\in[0,t]}$ because $P_0 f = f$ and $\operatorname*{ess\,sup}_{z\in K^c} f(z) = 0$).

Multiplying (4.2) by a non-negative function $g \in L^1(A)$ and integrating, we obtain

$$\int_A (P_t f)\, g\, d\mu \le \int_A \left(P_t^B f\right) g\, d\mu + M\|f\|_{L^1}\|g\|_{L^1},$$

which is equivalent to

$$\begin{aligned}\int_A\int_A p_t(x,y)f(y)g(x)d\mu(x)d\mu(y) \quad &\le \quad \int_A\int_A p_t^B(x,y)f(y)g(x)d\mu(x)d\mu(y)\\ &\quad +M\|f\|_{L^1}\|g\|_{L^1}.\end{aligned}$$

Dividing by $\|f\|_{L^1}\|g\|_{L^1}$ and taking inf in all test functions f, g, we obtain

$$\operatorname*{ess\,inf}_{x,y\in A} p_t(x,y) \le \operatorname*{ess\,inf}_{x,y\in A} p_t^B(x,y) + M. \tag{4.4}$$

By the definition of w-LLE(τ), we need to estimate $\operatorname*{ess\,inf}_{x,y\in A} p_t^B(x,y)$ from below assuming

$$t \le \tau(\varepsilon R) \quad \text{and} \quad r \le \varepsilon\tau^{-1}(t), \tag{4.5}$$

for some $\varepsilon \in (0,1)$. For that, we estimate the left hand side of (4.4) from below and M from above. The value of ε will be chosen small enough to satisfy a number of requirements. From the beginning we can assume that $\varepsilon < 1/4$ and that w-HKE$(\tau;\varepsilon)$ is satisfied. Then we have by (3.7)

$$\operatorname*{ess\,inf}_{x,y\in A} p_t(x,y) \geq \frac{c_3}{V(x,\tau^{-1}(t))}. \tag{4.6}$$

To estimate M from above, observe that, for all $z \in K^c$ and $y \in A$,

$$d(z,y) \geq \frac{R}{2} - r \geq \frac{R}{4}.$$

Also, for any $s \leq t$, using $\varepsilon < 1/4$, we obtain by (3.1)

$$\frac{\tau(d(z,y))}{s} \geq \frac{\tau(R/4)}{s} \geq C^{-1}\left(\frac{R}{4\tau^{-1}(s)}\right)^{\beta_1}.$$

Hence, for all $0 < s \leq t$ and μ-almost all $z \in K^c$ and $y \in A$, we have by (3.6)

$$\begin{aligned} p_s(z,y) &\leq \frac{c_1}{V(y,\tau^{-1}(s))}\exp\left(-c_2\left(\frac{\tau(d(z,y))}{s}\right)^{1/(\beta_2-1)}\right) \\ &\leq \frac{c_1}{V(x_0,\tau^{-1}(t))}\frac{V(x_0,\tau^{-1}(t))}{V(y,\tau^{-1}(s))}\exp\left(-c_2'\left(\frac{R}{\tau^{-1}(s)}\right)^{\beta_1/(\beta_2-1)}\right) \\ &\leq \frac{C}{V(x_0,\tau^{-1}(t))}\left(\frac{R}{\tau^{-1}(s))}\right)^{\gamma}\exp\left(-c_2'\left(\frac{R}{\tau^{-1}(s)}\right)^{\beta_1/(\beta_2-1)}\right), \end{aligned}$$

where we have used (3.11) and $\tau^{-1}(t) \leq R$. Note that by (4.5)

$$\frac{R}{\tau^{-1}(s)} \geq \varepsilon^{-1}.$$

Using the fact that, for positive a, b,

$$\xi^a \exp\left(-c_2\xi^b\right) \to 0 \text{ as } \xi \to \infty,$$

we conclude that if ε is small enough then

$$p_s(z,y) \leq \frac{c_3/2}{V(x_0,\tau^{-1}(t))},$$

where c_3 is the constant from (4.6). It follows that also

$$M \leq \frac{c_3/2}{V(x_0,\tau^{-1}(t))},$$

which together with (4.4) and (4.6) implies

$$\operatorname*{ess\,inf}_{x,y\in A} p_t^B(x,y) \geq \frac{c_3/2}{V(x_0,\tau^{-1}(t))},$$

which was to be proved.

4.2 Proof of $(b) \Rightarrow (c)$ (w-LLE implies w-PHI)

Here we prove that VD + LLE$(\tau;\varepsilon)$ implies w-PHI(τ). The argument mostly follows [11, Section 5], with modifications that are appropriate to the present setting. Observe first that LLE$(\tau;\varepsilon)$ implies

$$p_t^{B(x_0,R)}(x,y) \geq \frac{c_6}{V(x_0,R)}, \tag{4.7}$$

for $\mu \times \mu$-almost all $x, y \in B(x_0, \varepsilon r)$ provided r and t satisfy the conditions

$$\tau(r) \leq t \leq \tau(\varepsilon R).$$

Indeed, we have $r \leq \tau^{-1}(t)$ whence $x, y \in B(x_0, \varepsilon\tau^{-1}(t))$ and hence, (3.10) holds, which implies (4.7) because $\tau^{-1}(t) \leq \varepsilon R < R$.

For all $s \in \mathbb{R}$, $r > 0$ and $x \in X$, define the cylinder

$$D((s,x),r) := (s - \tau(r), s) \times B(x,r).$$

For any set $A \subset \mathbb{R} \times X$ and a function f on A, define

$$\operatorname*{ess\,sup}_A f = \sup_t \operatorname*{ess\,sup}_{\{x:(t,x)\in A\}} f(t,x),$$

and define $\operatorname*{ess\,inf}_A f$ analogously. Set

$$\operatorname*{osc}_A f := \operatorname*{ess\,sup}_A f - \operatorname*{ess\,inf}_A f.$$

4.2.1 Oscillation inequality and the Hölder continuity

Proposition 4.1 *Assume that* VD *and* LLE$(\tau;\varepsilon)$ *hold. Then, for any bounded caloric function u in a cylinder $D((s,x),R)$, the following inequality holds*

$$\operatorname*{osc}_{D((s,x),\delta R)} u \leq \theta \operatorname*{osc}_{D((s,x),R)} u, \tag{4.8}$$

(see Fig. 2), with constants $\delta, \theta \in (0,1)$ that depend only on the constants in the hypotheses.

Proof. Let $m(R)$ and $M(R)$ denote, respectively, the essential infimum and essential supremum of u on $D((s,x),R)$. Since $u + \text{const}$ is a caloric function, we obtain by Corollary 2.3 that

$$u(t,y) - m(R) \geq \int_{B(x,R)} p_{t-\xi}^{B(x,R)}(y,z)(u(\xi,z) - m(R))\mu(dz), \tag{4.9}$$

for all $s - \tau(R) < \xi < t < s$ and μ-almost all $y \in B(x,R)$. Choose here

$$\xi = s - \tau(\varepsilon R).$$

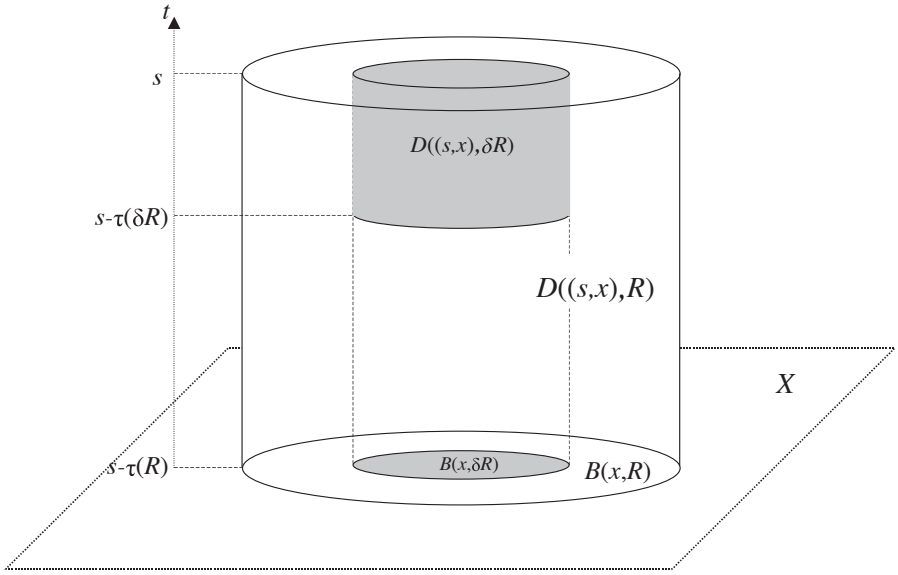

Figure 2: Cylinders $D\left((x,s),R\right)$ and $D\left((x,s),\delta R\right)$

By the properties of the function $\tau\left(\cdot\right)$, there is a constant $\varepsilon' \in (0,\varepsilon)$ such that

$$\tau(\varepsilon r) \geq 2\tau(\varepsilon' r) \text{ for all } r > 0.$$

Then, for any $t \in (s-\tau(\varepsilon' R), s)$, we have

$$\begin{aligned} t-\xi &\leq \tau(\varepsilon R), \\ t-\xi &\geq \tau(\varepsilon R) - \tau(\varepsilon' R) \geq \tau(\varepsilon' R). \end{aligned}$$

It follows from (4.7) that, for this range of t,

$$p_{t-\xi}^{B(x,R)}(y,z) \geq \frac{c_1}{V(x,R)} \quad \text{for all } \ \mu\text{-a.a. } y,z \in B(x,\varepsilon\varepsilon' R). \tag{4.10}$$

Set $\delta = \varepsilon\varepsilon'$ so that both (4.10) and (4.9) are satisfied for $(t,y) \in D((s,x),\delta R)$. Restricting the integration in (4.9) to $B\left(x,\delta R\right)$, using (4.10), and taking the essential infimum in $(t,y) \in D((s,x),\delta R)$, we obtain

$$m(\delta R) - m(R) \geq \frac{c_1}{V(x,R)} \int_{B(x,\delta R)} (u(\xi,z) - m(R))\mu(dz). \tag{4.11}$$

By a similar argument using $M(R) - u(t,y)$, we obtain

$$M(R) - M(\delta R) \geq \frac{c_1}{V(x,R)} \int_{B(x,\delta R)} (M(R) - u(\xi,z))\mu(dz), \tag{4.12}$$

which together with (4.11) implies

$$\begin{aligned} M(R) - m(R) - (M(\delta R) - m(\delta R)) &\geq \frac{c_1 V(x,\delta R)}{V(x,R)}(M(R) - m(R)) \\ &\geq c_2(M(R) - m(R)), \end{aligned}$$

where VD has been used in the last inequality. Rearranging this inequality, we obtain

$$(1-c_2)(M(R)-m(R)) \geq M(\delta R)-m(\delta R),$$

which proves (4.8) with $\theta = 1-c_2$. ■

From the oscillation inequality, a standard argument gives the Hölder continuity of caloric functions as follows.

Corollary 4.2 *Assume that* VD *and* LLE$(\tau;\varepsilon)$ *hold. Then, for any bounded caloric function u in a cylinder $D((t_0,x_0),R)$, the following inequality is satisfied*

$$|u(s',x')-u(s'',x'')| \leq C\left(\frac{\tau^{-1}(|s'-s''|)+d(x',x'')}{R}\right)^{\alpha} \operatorname*{osc}_{D((t_0,x_0),R)} u \tag{4.13}$$

for all almost all $(s',x'),(s'',x'') \in D((t_0,x_0),\delta R)$, where $\alpha,\delta \in (0,1)$ and $C>0$ are constants that depend on the constants in hypotheses VD *and* LLE$(\tau;\varepsilon)$.

Proof. We will prove the following equivalent form of (4.13): for any $r>0$ and for almost all $(s',x'),(s'',x'') \in D((t_0,x_0),\delta R)$ such that

$$\tau^{-1}(|s'-s''|)+d(x',x'') < r, \tag{4.14}$$

the following inequality holds:

$$|u(s',x')-u(s'',x'')| \leq C\left(\frac{r}{R}\right)^{\alpha} \operatorname*{osc}_{D((t_0,x_0),R)} u. \tag{4.15}$$

It suffices to show that any two points $(s',x'),(s'',x'') \in D((t_0,x_0),\delta R)$ with condition (4.14) are contained in an open subset $\Omega \subset D((t_0,x_0),R)$ such that

$$\operatorname*{osc}_{\Omega} u \leq C\left(\frac{r}{R}\right)^{\alpha} \operatorname*{osc}_{D((t_0,x_0),R)} u. \tag{4.16}$$

Since the metric space $(\mathbb{R}\times X)^2$ is separable, the set S of couples $((s',x'),(s'',x''))$ in $D((t_0,x_0),\delta R)\times D((t_0,x_0),\delta R)$ satisfying (4.14) can be then covered by a countable family of sets like $\Omega\times\Omega$ where Ω is as above. Because in each $\Omega\times\Omega$ the estimate (4.15) holds almost everywhere, it follows that (4.15) holds almost everywhere in S.

Assuming that $s' \geq s''$, set $y=x'$ and choose t to be a bit larger than s' so that $s'<t<t_0$ and

$$\tau^{-1}(t-s)+d(x,y) < r \tag{4.17}$$

for both the points $(s,x)=(s',x')$ and $(s,x)=(s'',x'')$ (the strict inequality in (4.14) provides a flexibility for making t strictly larger than s'). Then define the set Ω by

$$\Omega = D((t,y),r)\cap D((t_0,x_0),R).$$

By construction, we have $(t,y)\in D((t_0,x_0),\delta R)$, that is,

$$t_0-\tau(\delta R) < t < t_0 \text{ and } d(x_0,y) < \delta R.$$

Also, it follows from (4.17) that both the points (s', x') and (s'', x'') belong to $D((t,y), r)$.

Consider first the case when $D((t,y), r)$ is not contained in $D((t_0, x_0), R)$. Then we have

$$d(x_0, y) + r > R \quad \text{or} \quad t_0 - \tau(R) > t - \tau(r),$$

which implies that

$$r > (1-\delta) R \quad \text{or} \quad \tau(r) > \tau(R) - \tau(\delta R) \geq \tau(\delta R)$$

whence it follows in the both cases $r \geq \delta R$. (Here we may and will assume that $\delta < 1/2$.) Clearly, in this case (4.16) is trivial for any $\alpha > 0$ just by taking the constant C larger than $\delta^{-\alpha}$.

Assume now that $D((t,y), r) \subset D((t_0, x_0), R)$, and let $k \geq 1$ be a possibly large integer (to be specified below) such that

$$D\left((t,y), \delta^{-k} r\right) \subset D((t_0, x_0), R) \tag{4.18}$$

(see Fig. 3).

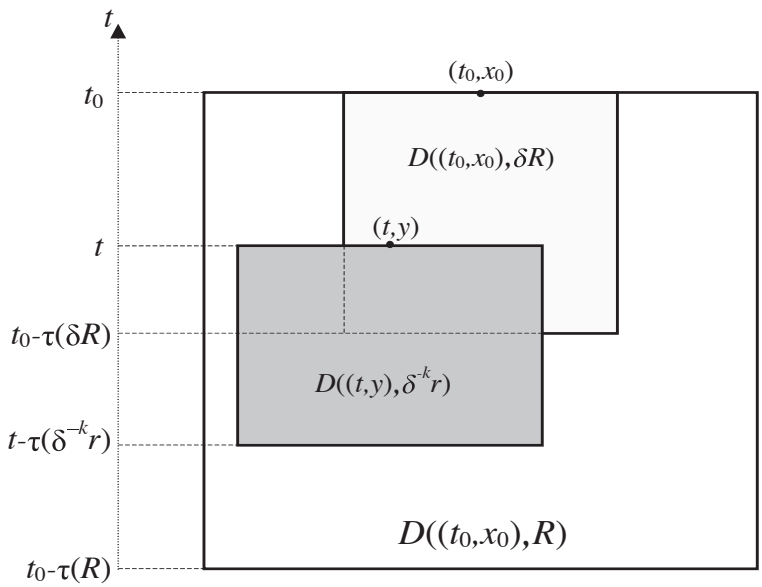

Figure 3: Cylinder $D\left((t,y), \delta^{-k} r\right)$

Then by Proposition 4.1, we have

$$\operatorname*{osc}_{D((t,y),r)} u \leq \theta^k \operatorname*{osc}_{D((t,y),\delta^{-k}r)} u \leq \theta^k \operatorname*{osc}_{D((t_0,x_0),R)} u. \tag{4.19}$$

The value of k in (4.18) can be estimated as follows. The condition (4.18) means that

$$t_0 - \tau(R) \leq t - \tau\left(\delta^{-k} r\right) \quad \text{and} \quad d(x_0, y) + \delta^{-k} r \leq R,$$

which will follow from

$$\tau(\delta R) + \tau\left(\delta^{-k} r\right) \leq \tau(R) \quad \text{and} \quad \delta R + \delta^{-k} r \leq R. \tag{4.20}$$

The value of δ can be assumed to be so small that

$$\tau(\delta R) \leq \frac{1}{2}\tau(R) \quad \text{and} \quad \delta < 1/2,$$

so that both the conditions in (4.20) will follow from $\delta^{-k} r \leq \delta R$. Hence, (4.18) and a forteriori (4.19) hold with

$$k = \left[\frac{\log(R/r)}{\log(1/\delta)}\right] - 1 \geq \frac{\log(R/r)}{\log(1/\delta)} - 2.$$

It follows from (4.19) that

$$\operatorname*{osc}_{D((t,y),r)} u \leq C\left(\frac{r}{R}\right)^{\alpha} \operatorname*{osc}_{D((t_0,x_0),R)} u, \tag{4.21}$$

where $\alpha = \frac{\log(1/\theta)}{\log(1/\delta)}$ and $C = \theta^{-2}$. ■

Remark. It follows from Corollary 4.2 that any locally bounded caloric function $u(t,x)$, defined in a cylinder, is continuous in its entire domain; more precisely, it has a version that is jointly continuous in (t,x). Hence, in the rest of the proof of $(b) \Rightarrow (c)$ we can assume that all locally bounded solutions are continuous.

4.2.2 Obtaining the Harnack inequality

We can now complete the proof of $(b) \Rightarrow (c)$. It follows from (3.1) that there exists a (small) constant $l \in (0,1)$ such that

$$\tau(r) \geq 2\tau(lr) \tag{4.22}$$

for all $r > 0$. We will prove w-PHI(τ) in a slightly different, but equivalent form: if $u(t,x)$ is a bounded (and hence continuous) non-negative caloric function in the cylinder

$$Q = (0, \tau(\varepsilon R)) \times B(x_0, R),$$

where $x_0 \in X$ and $R > 0$ are arbitrary and ε is the parameter from LLE($\tau;\varepsilon$), then

$$\sup_{Q_-} u \leq C \inf_{Q_+} u,$$

where

$$Q_- = (\tau(l^3\varepsilon R), \tau(l^2\varepsilon R)) \times B(x_0, \eta R), \quad Q_+ = (\tau(l\varepsilon R), \tau(\varepsilon R)) \times B(x_0, \eta R), \tag{4.23}$$

and the constants $\eta \in (0,1)$, $C > 1$ depend only on the constants in the hypotheses. It is enough to show that if $\inf_{Q_+} u \leq 1$ then $\sup_{Q_-} u \leq C$.

The essential part of the proof is contained in the following claim.

Claim. Let $(t,x) \in Q$ and $r > 0$ be such that

$$D\left((t,x),r\right) \subset \widetilde{Q} := (0, \tau(l^2 \varepsilon R)) \times B\left(x_0, \sigma R\right) \tag{4.24}$$

where σ is a constant to be specified later on; so far let us assume $\eta < \sigma < 1$ (see Fig. 4). If

$$u\left(t,x\right) \geq \lambda,$$

then

$$\sup_{D((t,x),r)} u \geq K\lambda,$$

with some constant $K > 1$, provided λ satisfies the inequality

$$\lambda \geq C\left(\frac{R}{r}\right)^{\gamma}, \tag{4.25}$$

where γ is the constant from (3.11) and C is a large enough constant. Both constants C and K depend only upon the constants in the hypotheses.

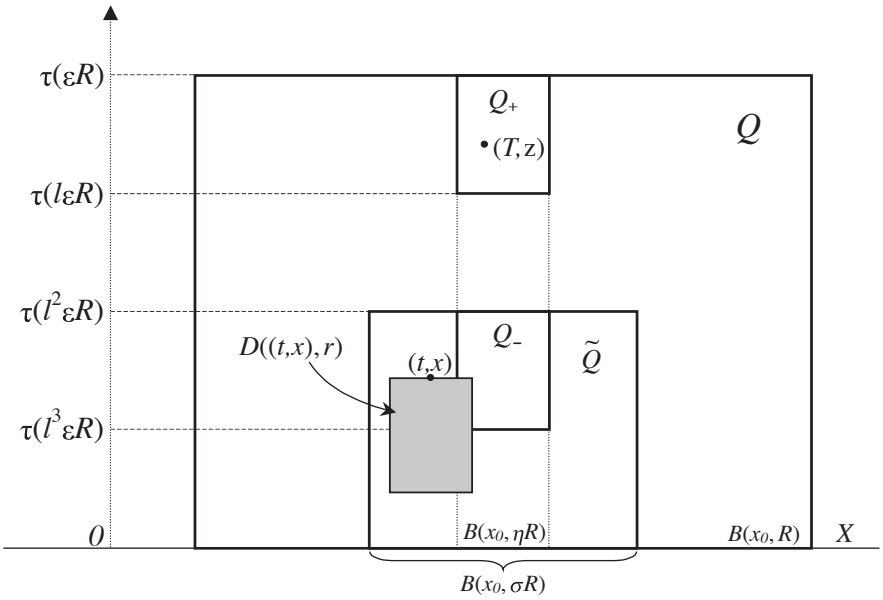

Figure 4: Cylinder $D\left((t,x),r\right)$

Observe first that, by Corollary 2.3, we have, for all $t < T < \tau\left(\varepsilon R\right)$ and μ-almost all $z \in B\left(x_0, R\right)$, that

$$u(T,z) \geq \int_{B(x_0,R)} p_{T-t}^{B(x_0,R)}(z,y) u(t,y) \mu(dy). \tag{4.26}$$

Restrict T to the interval $\tau(l\varepsilon R) < T < \tau(\varepsilon R)$. For any $0 < t < \tau(l^2 \varepsilon R)$, it follows that

$$\tau(\kappa R) < T - t < \tau(\varepsilon R), \tag{4.27}$$

where $\kappa = l^2\omega$, which is true by (4.22). Applying (4.7) with $r = \kappa R$, (4.27), and VD, we obtain

$$p_{T-t}^{B(x_0,R)}(z,y) \geq \frac{c_1}{V(x_0,R)}, \tag{4.28}$$

for almost all $z, y \in B(x_0, \varepsilon\kappa R)$. We can assume that the constant σ from (4.24) is so small that

$$\sigma \leq \varepsilon\kappa. \tag{4.29}$$

Then (4.28) holds for almost all $z, y \in B(x_0, \sigma R)$ (see Fig. 5).

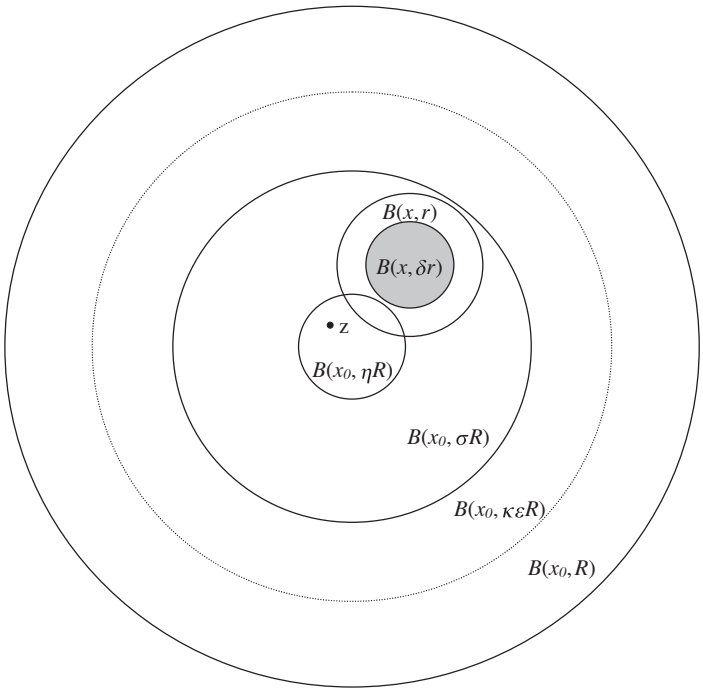

Figure 5: Estimating the function $u(t,y)$ in the ball $B(x,\delta r)$

Reducing the domain of integration in (4.26) to the ball $B(x,\delta r) \subset B(x_0,\sigma R)$ (where $\delta < 1$ is the constant from Proposition 4.1) and using (4.28), we obtain, for all T as above and almost all $z \in B(x_0,\sigma R)$,

$$u(T,z) \geq \frac{c_1}{V(x_0,R)} \int_{B(x,\delta r)} u(t,y)\mu(dy).$$

In particular, this inequality holds for almost all $(T,z) \in Q_+$. Since the right hand side does not depend on T, z, taking the essential infimum in $(T,z) \in Q_+$ and using $\operatorname{ess\,inf}_{Q_+} u = \inf_{Q_+} u \leq 1$, we obtain

$$1 \geq \frac{c_1}{V(x_0,R)} \int_{B(x,\delta r)} u(t,y)\mu(dy),$$

whence

$$\inf_{y \in B(x,\delta r)} u(t,y) \leq \Lambda := \frac{V(x_0,R)}{c_1 V(x,\delta r)}.$$

Combining with the hypothesis $u(t,x) \geq \lambda$, we see that

$$\operatorname*{osc}_{D((t,x),\delta r)} u \geq \lambda - \Lambda,$$

whence by Proposition 4.1

$$\sup_{D((t,x),r)} u \geq \operatorname*{osc}_{D((t,x),r)} u \geq \theta^{-1}(\lambda - \Lambda),$$

where $0 < \theta < 1$ is the constant from Proposition 4.1. We are left to make sure that

$$\theta^{-1}(\lambda - \Lambda) \geq K\lambda,$$

with a constant $K > 1$. Observe that by (3.11)

$$\Lambda \leq C_1 \left(\frac{R}{r}\right)^{\gamma},$$

where $C_1 = C_1(c_1, C_{\mathrm{VD}}, \gamma, \delta)$. Assuming from the beginning that

$$\lambda \geq \frac{2C_1}{1-\theta}\left(\frac{R}{r}\right)^{\gamma},$$

we obtain that $\Lambda \leq \lambda \frac{1-\theta}{2}$ and, hence,

$$\theta^{-1}(\lambda - \Lambda) \geq \frac{\theta^{-1}+1}{2}\lambda,$$

so that we can set $K = \frac{\theta^{-1}+1}{2} > 1$. This completes the proof of the Claim.

We can reformulate the Claim as follows. Define a function

$$\rho(\lambda) = \frac{R}{(C\lambda)^{1/\gamma}}$$

so that the condition (4.25) is equivalent to $r \geq \rho(\lambda)$. If for some point $(s,y) \in Q$, we have $\lambda := u(s,y) > 0$ and

$$D((s,y), \rho(\lambda)) \subset \widetilde{Q},$$

then there is a point $(s',y') \in D((s,y), \rho(\lambda))$ such that $u(s',y') \geq K\lambda$.

Start with an arbitrary point $(s_0,y_0) \in Q_-$ where $\lambda_0 := u(s_0,y_0) > 0$. Assuming that

$$D((s_0,y_0), \rho(\lambda_0)) \subset \widetilde{Q},$$

choose a point $(s_1,y_1) \in D((s_0,y_0), \rho(\lambda_0))$ where

$$\lambda_1 := u(s_1,y_1) \geq K\lambda_0.$$

If

$$D((s_1,y_1), \rho(\lambda_1)) \subset \widetilde{Q},$$

then select a point $(s_2, y_2) \in D\left((s_1, y_1), \rho(\lambda_1)\right)$ such that

$$\lambda_2 := u(s_2, y_2) \geq K\lambda_1 \geq K^2\lambda_0,$$

and so on. We obtain in this manner a sequence of points $\{(s_n, y_n)\}$ such that

$$\lambda_n := u(s_n, y_n) \geq K^n\lambda_0$$

and

$$(s_n, y_n) \in D\left((s_{n-1}, y_{n-1}), \rho(\lambda_{n-1})\right) \subset \widetilde{Q}.$$

(see Fig. 6).

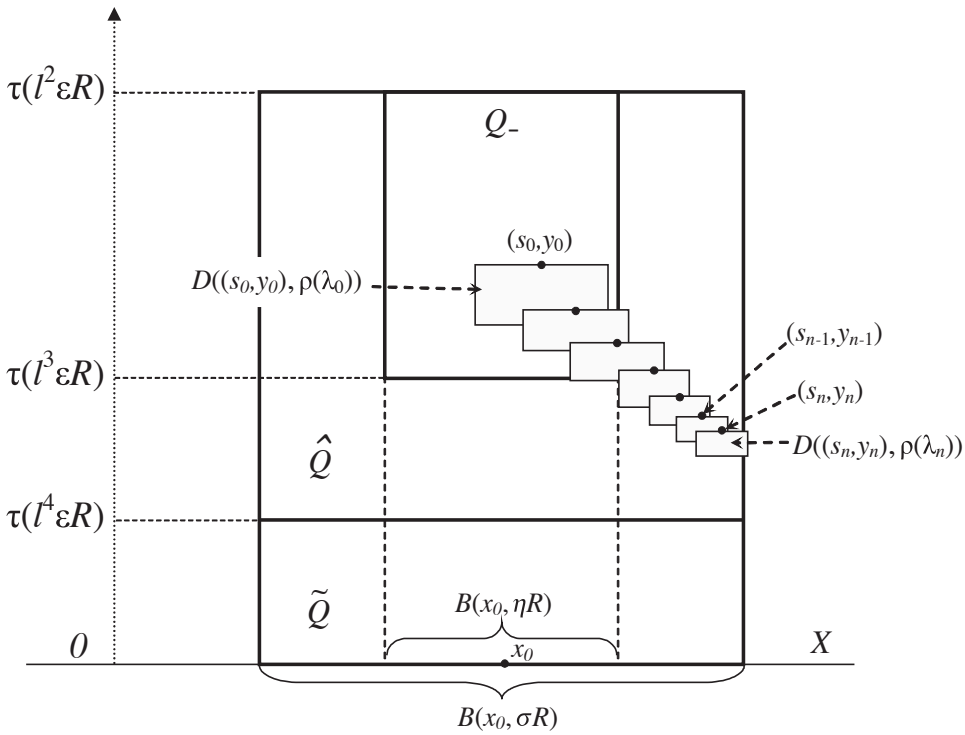

Figure 6: The sequence of cylinders $D\left((s_k, y_k), \rho(\lambda_k)\right)$

Let us continue this construction until

$$D\left((s_n, y_n), \rho(\lambda_n)\right) \not\subset \widehat{Q} := [\tau(l^4\varepsilon R), \tau(l^2\varepsilon R)] \times \overline{B(x_0, \sigma R)}. \tag{4.30}$$

If such n does not exist then we obtain an infinite sequence $(s_n, y_n) \in \widehat{Q}$ such that $u(s_n, y_n) \to \infty$ which is not possible because the function u is bounded in $\widehat{Q}$. Hence, there exists an n that satisfies (4.30). It follows that either $y_n \notin B(x_0, \sigma R)$ or $s_n \leq \tau(l^4\varepsilon R)$. In the former case, we have

$$d(y_0, y_n) \geq d(x_0, y_n) - d(x_0, y_0) \geq (\sigma - \eta) R,$$

and in the latter case

$$s_0 - s_n \geq \tau(l^3\varepsilon R) - \tau(l^4\varepsilon R) \geq \tau(\kappa R)$$

where $\kappa = l^4\varepsilon$.

On the other hand, we have

$$d(y_0, y_n) \le \sum_{k=0}^{n-1} d(y_k, y_{k+1}) \le \sum_{k=0}^{n-1} \rho(\lambda_k) \le \sum_{k=0}^{n-1} \rho\left(K^k \lambda_0\right) \le C_2 R \lambda_0^{-1/\gamma}$$

and similarly

$$s_0 - s_n = \sum_{k=0}^{n} (s_k - s_{k+1}) \le \sum_{k=0}^{n} \tau(\rho(\lambda_k)) \le \tau(C_3 R \lambda_0^{-1/\gamma}),$$

where we have used (3.1). Comparing with the above lower bounds of $d(y_0, y_n)$ and $s_0 - s_n$, we obtain in the both cases that

$$\lambda_0 \le C_4 = C_4(C_2, C_3, \sigma, \eta, \gamma).$$

Since λ_0 is the value of u at an arbitrary point in Q_-, it follows that $\sup_{Q_-} u \le C_4$, which finishes the proof of w-PHI(τ).

4.3 Proof of $(c) \Rightarrow (a)$ (w-PHI implies w-HKE)

We prove here that VD + w-PHI(τ) implies w-HKE(τ).

4.3.1 A technical lemma

We start with the following lemma.

Lemma 4.3 *For any $\nu \in (0,1)$ there exist constants $\kappa, \omega \in (0,1)$ depending on ν and on β_1 from (3.1) with the following property: for any $R > 0$ there is $r \in [\omega R, R]$ such that*

$$\tau(r) - \tau(\nu r) \ge \tau(\kappa R). \tag{4.31}$$

Proof. Consider sequence $r_i = \nu^i R$, $i = 0, 1, 2, ...$ and assume that, for some positive integer n, none of the values $r_0, ..., r_{n-1}$ satisfies (4.31), that is,

$$\begin{aligned}
\tau(r_0) - \tau(r_1) &< \tau(\kappa R) \\
\tau(r_1) - \tau(r_2) &< \tau(\kappa R) \\
&\dots \\
\tau(r_{n-1}) - \tau(r_n) &< \tau(\kappa R).
\end{aligned}$$

Adding up all these inequalities yields

$$\tau(R) - \tau(r_n) < n\tau(\kappa R).$$

By (3.1) we have

$$\tau(\kappa R) \le C\kappa^{\beta_1}\tau(R)$$

and

$$\tau(r_n) = \tau(\nu^n R) \le C\nu^{n\beta_1}\tau(R)$$

whence

$$\tau(R) \le C\nu^{n\beta_1}\tau(R) + nC\kappa^{\beta_2}\tau(R). \tag{4.32}$$

Choose now $n = n(\beta_1, \nu)$ so big that $C\nu^{n\beta_1} < \frac{1}{2}$ and then choose $\kappa = \kappa(\beta_1, \nu) > 0$ so small that $nC\kappa^{\beta_2} < \frac{1}{2}$. With these values of n and κ equation (4.32) cannot hold, which means that there is $i < n$ such that

$$\tau(r_i) - \tau(r_{i+1}) \ge \tau(\kappa R).$$

Clearly, we have

$$r_i = \nu^i R \ge \nu^n R = \omega R$$

where $\omega := \nu^n$, which finishes the proof. ■

4.3.2 Oscillation inequality and the Hölder continuity

The next statement is an analogue of Proposition 4.1.

Proposition 4.4 *Assume that* w-PHI(τ) *holds. Then, for any bounded caloric function u in a cylinder $D((s,x),R)$, the oscillation inequality* (4.8) *holds with constants δ, $\theta \in (0,1)$ that depend only on the constants in the hypotheses.*

Proof. Fix some $r > 0$ and consider the cylinders

$$Q(r) := Q(x, \tau(C_4 r), C_5 r) = (0, \tau(C_4 r)) \times B(x, C_5 r)$$

and

$$Q_-(r) := (\tau(C_1 r), \tau(C_2 r)) \times B(x, r),$$
$$Q_+(r) := (\tau(C_3 r), \tau(C_4 r)) \times B(x, r),$$

as in the definition of w-PHI(τ). We would like to choose r such that

$$Q(r) \subset D((s,x),R) = (s - \tau(R), s) \times B(x, R)$$

and

$$Q_+(r) \supset D((s,x), \delta R) = (s - \tau(\delta R), s) \times B(x, \delta R)$$

(see Fig. 7).

The inclusions of the corresponding balls occur if

$$R \ge C_5 r \text{ and } r \ge \delta R. \tag{4.33}$$

To handle the inclusion of the time intervals, first make a shift of time to ensure $s = \tau(C_4 r)$. Then the inclusions of the time interval occur provided

$$\tau(R) \ge \tau(C_4 r) \text{ and } \tau(\delta R) \le \tau(C_4 r) - \tau(C_3 r). \tag{4.34}$$

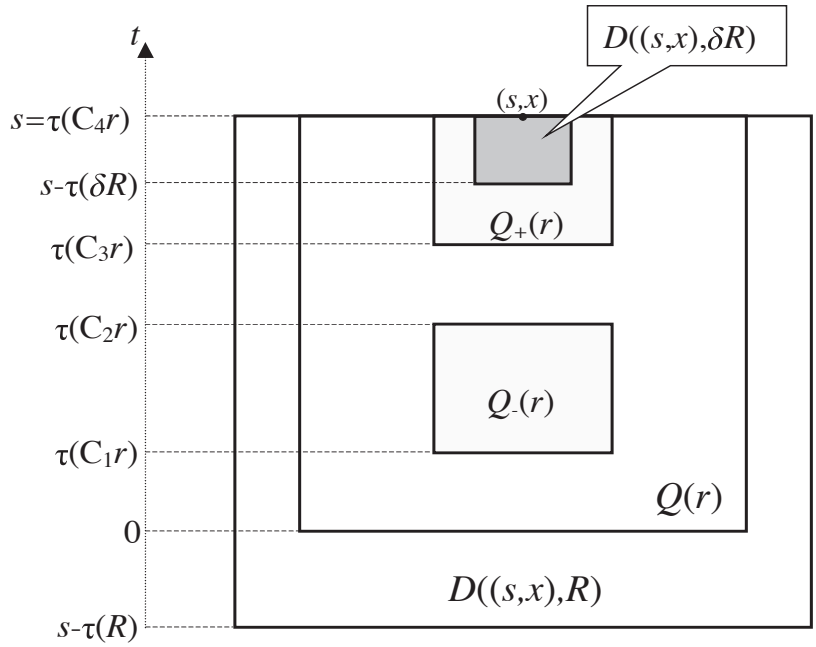

Figure 7: Cylinders $Q(r), Q_+(r), Q_-(r)$

Setting $\nu = \frac{C_3}{C_4}$ and $R' = R/C_5$, observe that by Lemma 4.3 there exists $r' \in [\omega R', R']$ such that

$$\tau(r') - \tau(\nu r') \geq \tau(\kappa R'),$$

where κ and ω are positive constants depending on ν and β_1. Setting $r = r'/C_4$ we obtain that

$$\omega R \leq C_4 C_5 r \leq R \quad \text{and} \quad \tau(C_4 r) - \tau(C_3 r) \geq \tau\left(\kappa C_5^{-1} R\right)$$

so that both the conditions (4.33) and (4.34) are satisfied with

$$\delta = \min\left(\frac{\omega}{C_4 C_5}, \frac{\kappa}{C_5}\right).$$

Let $m(R)$ and $M(R)$ be the essential infimum and essential supremum of u on $D((s,x),R)$. Applying w-PHI(τ) to the function $u - m(R)$ in $Q(r)$, we obtain

$$\begin{aligned}
\operatorname*{ess\,sup}_{Q_-(r)} (u - m(R)) &\leq C_6 \operatorname*{ess\,inf}_{Q_+(r)} (u - m(R)) \\
&\leq C_6 \operatorname*{ess\,inf}_{D((s,x),\delta R)} (u - m(R)) \\
&= C_6(m(\delta R) - m(R)),
\end{aligned}$$

and in the same way

$$\operatorname*{ess\,sup}_{Q_-(r)} (M(R) - u) \leq C_6(M(R) - M(\delta R)).$$

Adding up the two inequalities, we obtain

$$\begin{aligned} M(R) - m(R) &\leq \operatorname*{ess\,sup}_{Q_-(r)} ((M(R) - u) + \operatorname*{ess\,sup}_{Q_-(r)} (u - m(R)) \\ &\leq C_6(m(\delta R) - m(R)) + C_6(M(R) - M(\delta R)), \end{aligned}$$

whence

$$M(\delta R) - m(\delta R) \leq (1 - \frac{1}{C_6})(M(R) - m(R)).$$

Hence, (4.8) holds with $\theta = (1 - 1/C_6)$. ■

Corollary 4.5 *Assume that* w-PHI(τ) *holds. Then the conclusion of* Corollary 4.2 *holds. In particular, any locally bounded caloric function has a continuous version.*

The proof is the same as that of Corollary 4.2. In what follows we will always use the continuous versions of locally bounded solutions.

4.3.3 Existence of the heat kernel and on-diagonal upper bound

We next show the existence and an on-diagonal upper bound of the heat kernel under the assumption w-PHI(τ). Let f be a non-negative function from $f \in L^2 \cap L^\infty(X, \mu)$. The function $v(t, x) = e^{t\mathcal{L}} f(x)$ is a non-negative essentially bounded caloric function in $\mathbb{R}_+ \times X$. By the previous section, this function has a continuous version; let us denote in the sequel by $P_t f(x)$ the continuous version of $e^{t\mathcal{L}} f$.

Choose some $r > 0$, $x \in X$, set $B = B(x, r)$ and $t_k = \tau(C_k r)$ where $k = 1, 2, 3, 4$ and C_k are the constants from w-PHI(τ). Applying the Harnack inequality in the cylinder $Q(x, \tau(C_4 r), C_5 r)$, we obtain, for any $t \in (t_1, t_2)$,

$$P_t f(x) \leq C_6 \inf_{t_3 < s < t_4, y \in B} P_s f(y). \tag{4.35}$$

Since $\|P_s f\|_2 \leq \|f\|_2$, it follows that

$$\inf_{t_3 < s < t_4, y \in B} (P_s f(y))^2 \leq \frac{1}{(t_4 - t_3)\mu(B)} \int_{t_3}^{t_4} \int_B (P_s f(y))^2 \, d\mu(y) \, ds \leq \frac{\|f\|_2^2}{V(x, r)}.$$

Setting in (4.35) $t = \tau\left(\frac{C_1 + C_2}{2} r\right)$ and noticing that $r = c\tau^{-1}(t)$, where

$$c = \frac{2}{C_1 + C_2},$$

we obtain that, for all $t > 0$ and $x \in X$,

$$P_t f(x) \leq \frac{C\|f\|_2}{V(x, c\tau^{-1}(t))^{1/2}}, \tag{4.36}$$

where $C = C_6$.

Let us extend (4.36) to all non-negative functions $f \in L^2(X)$. Indeed, setting $f_n := \min(f, n)$ we obtain $f_n \in L^2 \cap L^\infty$ so that (4.36) holds for f_n. Hence, the

sequence $\{P_t f_n(x)\}_{n=1}^{\infty}$ is bounded and increasing in n and, hence, converges for any t and x. Clearly, the limit is a pointwise version of $e^{t\mathcal{L}}f$ which will be denoted by $P_t f(x)$. Applying (4.36) to $f_n - f_m$ with $n > m$, we obtain

$$P_t f_n(x) - P_t f_m(x) \leq \frac{C\|f_n - f_m\|_2}{V(x, c\tau^{-1}(t))^{1/2}}.$$

Since $\|f_n - f_m\|_2 \to 0$ as $n, m \to \infty$ and the function $(t, x) \mapsto V(x, c\tau^{-1}(t))^{1/2}$ is locally uniformly bounded away from 0 in $\mathbb{R}_+ \times X$, it follows that

$$P_t f_n(x) - P_t f_m(x) \to 0 \text{ as } n, m \to \infty,$$

where the convergence is locally uniform in (t, x), which implies that the limit $P_t f(x)$ is a continuous function of (t, x) which satisfies (4.36). Finally, for any signed $f \in L^2(X)$, we have $P_t f = P_t f_+ - P_t f_-$, whence the continuity of $P_t f(x)$ and (4.36) follow.

It follows from (4.36) and the Riesz representation theorem that, for any $(t, x) \in \mathbb{R}_+ \times X$ there exists a function $p_{t,x} \in L^2(X)$ such that

$$P_t f(x) = (p_{t,x}, f) \text{ for all } f \in L^2(X) \tag{4.37}$$

and

$$\|p_{t,x}\|_2 \leq \frac{C}{V(x, c\tau^{-1}(t))^{1/2}}. \tag{4.38}$$

Following [34], define the heat kernel $p_t(x, y)$ as a pointwise function of $t, x, y \in \mathbb{R}_+ \times X \times X$ by

$$p_t(x, y) = \left(p_{t/2,x}, p_{t/2,y}\right). \tag{4.39}$$

The necessary properties of the heat kernel are stated in the following lemma, which hence concludes the proof of this part of Theorem 3.1.

Lemma 4.6 *Under the above conditions, the function $p_t(x, y)$ that is defined by (4.39), is non-negative, continuous in $(t, x, y) \in \mathbb{R}_+ \times X \times X$, and satisfies the following identities:*

1. *For all $f \in L^2(X)$ and for all $t > 0$ and $x \in X$,*

$$P_t f(x) = \int_X p_t(x, y) f(y) d\mu(y). \tag{4.40}$$

2. *For all $t > 0$ and $x, y \in X$, $p_t(x, y) = p_t(y, x)$*
3. *For all $x, z \in X$ and $t, s > 0$,*

$$p_{t+s}(x, z) = \int_X p_s(x, y) p_t(y, z) d\mu(y). \tag{4.41}$$

Furthermore, for all $t > 0$ and $x \in X$, we have

$$p_t(x, x) \leq \frac{C}{V(x, c\tau^{-1}(t))}. \tag{4.42}$$

Proof. It follows from (4.37) that $p_{t,x}$ is non-negative almost everywhere, which implies by (4.39) that $p_t(x,y) \geq 0$. The symmetry $p_t(x,y) = p_t(y,x)$ is obvious from (4.39). By (4.38) and (4.39) we have

$$p_t(x,x) = \|p_{t/2,x}\|_2^2 \leq \frac{C^2}{V(x, c\tau^{-1}(t/2))}, \tag{4.43}$$

whence (4.42) follows by (3.2) and renaming the constants.

Before we prove the other claims, let us first show that, for all $x \in X$, $t, s > 0$, and $f \in L^2(X)$,

$$P_{t+s} f(x) = \int_X (p_{t,z}, p_{s,x}) f(z) \, d\mu(z). \tag{4.44}$$

Indeed, using the semigroup identity $P_{t+s} f(x) = P_s(P_t f)(x)$, which by the continuity of $P_t f(x)$ holds pointwise, (4.37), and the symmetry of P_t, we obtain

$$\begin{aligned} P_{t+s} f(x) &= P_s(P_t f)(x) \\ &= (p_{s,x}, P_t f) = (P_t p_{s,x}, f) \\ &= \int_X P_t p_{s,x}(z) f(z) \, d\mu(z) \\ &= \int_X (p_{t,z}, p_{s,x}) f(z) \, d\mu(z), \end{aligned}$$

which was to be proved.

Let us now show that, for all $x, y \in X$ and $t > 0$, the inner product $(p_{s,x}, p_{t-s,y})$ does not depend on $s \in (0,t)$; consequently, for all $x, y \in X$ and $0 < s < t$,

$$p_t(x,y) = (p_{s,x}, p_{t-s,y}). \tag{4.45}$$

Indeed, for all $0 < r < s < t$, we have, using (4.37) and applying (4.44) with $f = p_{r,x}$,

$$\begin{aligned} (p_{s,x}, p_{t-s,y}) &= P_s p_{t-s,y}(x) = P_r(P_{s-r} p_{t-s,y})(x) \\ &= \int_X p_{r,x}(z) (p_{s-r,z}, p_{t-s,y}) \, d\mu(z) \\ &= P_{t-r} p_{r,x}(y) \\ &= (p_{t-r,y}, p_{r,x}), \end{aligned}$$

which was to be proved. Combining (4.44) and (4.45), we obtain (4.40).

Comparison of (4.37) and (4.40) shows that

$$p_t(x, \cdot) = p_{t,x} \text{ a.e.} \tag{4.46}$$

Using (4.45) and (4.46), we obtain, for all $x, y \in X$ and $t, s > 0$,

$$\int_X p_t(x,z) p_s(z,y) \, d\mu(z) = (p_t(x,\cdot), p_s(y,\cdot)) = (p_{t,x}, p_{s,y}) = p_{t+s}(x,y),$$

which proves (4.41).

It follows from (4.37) and (4.45) that, for any fixed $0 < s < t$ and $x \in X$,

$$p_t(x, \cdot) = P_{t-s} p_{s,x}.$$

Since $p_{s,y} \in L^2$, it follows that $p_t(x, y)$ is jointly continuous in (t, y) for any fixed x. By symmetry, $p_t(x, y)$ is also jointly continuous in (t, x) for any fixed y.

To prove the joint continuity of $p_t(x, y)$ in (t, x, y), it suffices to show that $p_t(x, y)$ is continuous in x locally uniformly in (t, y). For that, we use Corollary 4.5. Let us apply the estimate (4.13) to the caloric function $P_t f(x)$, where $f \in L^2(X)$, in the cylinder $D((t, x_0), \rho(t))$ where $\rho(t) = \tau^{-1}(t/2)$ so that

$$D((t, x_0), \rho(t)) = (t/2, t) \times B(x_0, \rho(t)).$$

We obtain that, for all $x', x'' \in B(x_0, \delta\rho(t))$,

$$|P_t f(x') - P_t f(x'')| \le C \left(\frac{d(x', x'')}{\rho(t)} \right)^{\alpha} \sup_{\substack{s \in (t/2, t) \\ z \in B(x_0, \rho(t))}} |P_s f(z)|.$$

Rewrite (4.36) in the form

$$P_s f(z) \le F(s, z) \|f\|_2$$

where

$$F(s, z) := CV\left(z, c\tau^{-1}(s)\right)^{-1/2}$$

is a positive continuous function of $(s, z) \in \mathbb{R}_+ \times X$, which is decreasing in s. Combining the above two estimates, we obtain

$$|P_t f(x') - P_t f(x'')| \le C \left(\frac{d(x', x'')}{\rho(t)} \right)^{\alpha} \sup_{z \in B(x_0, \rho(t))} F(t/2, z) \|f\|_2.$$

Setting here $f = p_{t,y}$ with any $y \in X$, observing that $P_t f = p_{2t}(\cdot, y)$ and estimating $\|f\|_2$ by (4.38), we obtain, for all $x', x'' \in B(x_0, \delta\rho(t))$,

$$|p_{2t}(x', y) - p_{2t}(x'', y)| \le C \left(\frac{d(x', x'')}{\rho(t)} \right)^{\alpha} \sup_{z \in B(x_0, \rho(t))} F(t/2, z) F(t, y).$$

Clearly, this estimate implies that $p_{2t}(x, y)$ is continuous in x locally uniformly in (t, y), which finishes the proof. ■

Finally, note that the above construction of the heat kernel goes through for any open subset $\Omega \subset X$ because the semigroup $\left\{P_t^{\Omega}\right\}$ satisfies the key estimate (4.36) simply by $\left|P_t^{\Omega} f\right| \le P_t |f|$. Hence, P_t^{Ω} possesses the heat kernel $p_t^{\Omega}(x, y)$ that satisfies all the properties of Lemma 4.6.

It is worth mentioning that if Ω is relatively compact then the function $p_t^{\Omega}(x, y)$ is bounded in $(x, y) \in \Omega \times \Omega$ for any $t > 0$. Indeed, by (4.41) we have

$$\begin{aligned} p_t^{\Omega}(x, y)^2 &= \left(\int_{\Omega} p_{t/2}^{\Omega}(x, z) p_{t/2}^{\Omega}(z, y) d\mu(z) \right)^2 \\ &\le \int_{\Omega} p_{t/2}^{\Omega}(x, z)^2 d\mu(z) \int_{\Omega} p_{t/2}^{\Omega}(z, y)^2 d\mu(z) \\ &= p_t^{\Omega}(x, x) p_t^{\Omega}(y, y) \\ &\le p_t(x, x) p_t(y, y), \end{aligned}$$

whence by (4.42)

$$p_t^{\Omega}(x,y)^2 \leq \frac{C^2}{V(x, c\tau^{-1}(t))\, V(y, c\tau^{-1}(t))}.$$

Since the function $x \mapsto V(x, c\tau^{-1}(t))$ is bounded away from 0 on Ω, it follows that the function $(x,y) \mapsto p_t^{\Omega}(x,y)$ is bounded from above in $\Omega \times \Omega$.

4.3.4 Near diagonal lower bound

We start with a lemma.

Lemma 4.7 *Let Ω be an open subset of X with $\mu(\Omega) < \infty$. If for some $t > 0$, the operator P_t^{Ω} admits a bounded kernel $p_t^{\Omega}(x,y)$, then the spectrum of $\mathcal{L}^{\Omega}$ is discrete.*

Furthermore, if $\lambda_1(\Omega)$ denotes the bottom of the spectrum of $-\mathcal{L}^{\Omega}$, then the following inequality holds for all $t > 0$:

$$\operatorname*{ess\,sup}_{x,y\in\Omega} p_t^{\Omega}(x,y) \geq \frac{e^{-\lambda_1(\Omega)t}}{\mu(\Omega)}. \tag{4.47}$$

Note that the inequality (4.47) holds also in a more general setting – see [9, Proposition 2.3].

Proof. From the general theory of operators, we have the following trace formula

$$\operatorname{trace}\left(P_t^{\Omega}\right)^2 = \int_{\Omega}\int_{\Omega} p_t^{\Omega}(x,y)^2\, d\mu(x)\, d\mu(y). \tag{4.48}$$

By hypothesis, the right hand side is finite, which implies that the operator $\left(P_t^{\Omega}\right)^2 = e^{2t\mathcal{L}^{\Omega}}$ has a finite trace. Consequently, the spectrum of P_t^2 is discrete in $(0,+\infty)$, which implies that all the spectrum of $\mathcal{L}^{\Omega}$ is discrete.

Let $\{\lambda_k\}_{k=1}^{\infty}$ be the eigenvalues of $-\mathcal{L}^{\Omega}$, arranged in increasing order, and counted with multiplicity, so that $\lambda_1 = \lambda_1(\Omega)$. Then the operator $\left(P_t^{\Omega}\right)^2$ has the eigenvalues $e^{-2\lambda_k t}$ whence

$$\operatorname{trace}\left(P_t^{\Omega}\right)^2 = \sum_{k=1}^{\infty} e^{-2\lambda_k t} \geq e^{-2\lambda_1 t}.$$

Comparing with (4.48), we obtain

$$\int_{\Omega}\int_{\Omega} p_t^{\Omega}(x,y)^2\, d\mu(x)\, d\mu(y) \geq e^{-2\lambda_1 t},$$

whence (4.47) follows. ■

Returning to Theorem 3.1, observe that by the argument of the previous section, any ball $B = B(x_0, r)$ possesses the heat kernel $p_t^B(x,y)$ that is, for any $t > 0$, a bounded and continuous function of $(x,y) \in B \times B$. Hence, all the hypotheses of Lemma 4.7 are satisfied and we conclude that the spectrum of $\mathcal{L}^B$ is discrete. Let

$\varphi(x) \geq 0$ be the bottom eigenfunction of $-\mathcal{L}^B$ with the eigenvalue $\lambda_1(B)$. Consider the caloric function in $\mathbb{R}_+ \times \Omega$

$$v(t,x) := P_t^B \varphi(x) = e^{-\lambda_1(B)t}\varphi(x). \tag{4.49}$$

The boundedness of the heat kernel p_t^B implies that

$$\operatorname*{ess\,sup}_B v(t,\cdot) \leq \operatorname*{ess\,sup}_{x,y\in B} p_t^B(x,y) \|\varphi\|_{L^1(B)} < \infty,$$

that is, $v(t,\cdot)$ is essentially bounded in B for any $t > 0$, whence it clearly follows that $\varphi(x)$ is essentially bounded. Therefore, $v(t,x)$ is essentially bounded in $\mathbb{R}_+ \times B$, and we conclude by Corollary 4.2 that $v(t,x)$ is continuous in $\mathbb{R}_+ \times B$. Consequently, $\varphi(x)$ is continuous in B.

Let us show that $\varphi(x_0) > 0$. Assume that $\varphi(x) = 0$ at some $x \in B$. Let $\rho > 0$ be such that

$$B(x, C_5\rho) \subset B(x_0, r) \tag{4.50}$$

where C_5 is the constant from w-PHI(τ). Applying the Harnack inequality to the function v in $Q(x, \tau(C_4\rho), C_5\rho)$ and noticing that $v(t,x) \equiv 0$, we obtain

$$v(s,y) \equiv 0 \quad \text{on} \quad (\tau(C_1\rho), \tau(C_2\rho)) \times B(x,\rho),$$

whence

$$\varphi(y) \equiv 0 \quad \text{for all } y \in B(x,\rho).$$

Assuming that $\varphi(x_0) = 0$, let $R \in (0,r]$ be the maximal number such that

$$\varphi(x) = 0 \text{ for all } x \in B(x_0, R).$$

If $R < r$ then set $\rho = \frac{r-R}{C_5}$ so that (4.50) is satisfied for any $x \in B(x_0, R)$. By the above argument, we have $\varphi \equiv 0$ in $B(x,\rho)$, which implies that $\varphi \equiv 0$ in $B(x_0, R+\rho)$, which contradicts the maximality of R. We conclude that $R = r$ and, hence, $\varphi \equiv 0$ in $B(x_0, r)$, which is impossible because φ is an eigenfunction. Therefore, $\varphi(x_0) > 0$.

Now we apply the Harnack inequality (3.3) to the function $v(t,x)$ in the cylinder $Q(x_0, \tau(c_4 r), r)$, where we write for convenience of notation $c_k = \frac{C_k}{C_5}$ for $k = 1,2,3,4$ (see Fig. 8).

We obtain

$$v(t_-, x_0) \leq C_6 v(t_+, x_0),$$

where $t_- = \tau\left(\frac{c_1+c_2}{2} r\right)$ and $t_+ = \tau\left(\frac{c_3+c_4}{2} r\right)$. It follows then from (4.49) that

$$e^{-\lambda_1(B)t_-}\varphi(x_0) \leq C_6 e^{-\lambda_1(B)t_+}\varphi(x_0).$$

Since $\varphi(x_0) > 0$, we obtain that

$$\lambda_1(B) \leq \frac{\log C_6}{t_+ - t_-} \leq \frac{1}{\tau(\kappa r)} \tag{4.51}$$

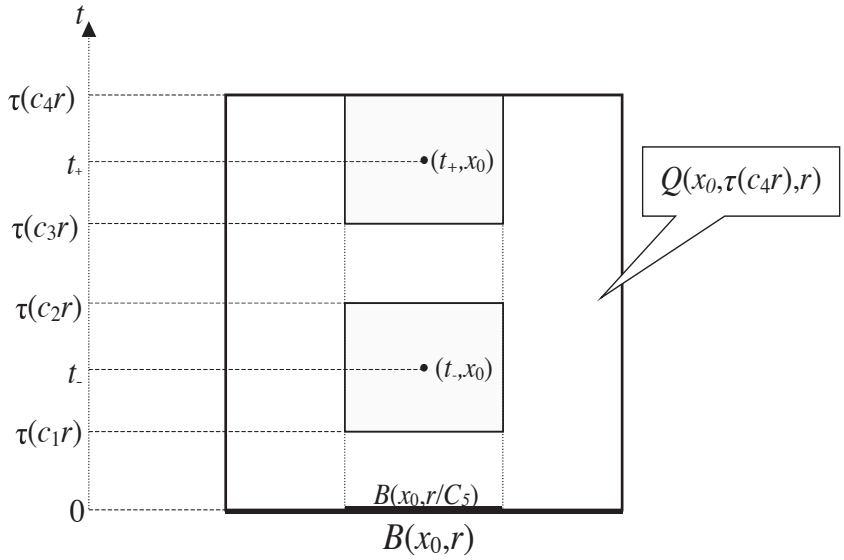

Figure 8: Cylinder $Q\left(x_0, \tau\left(c_4 r\right), r\right)$

where $\kappa > 0$ is chosen so that

$$\tau\left(\frac{c_3 + c_4}{2} r\right) - \tau\left(\frac{c_1 + c_2}{2} r\right) \geq \frac{\tau\left(\kappa r\right)}{\log C_6}$$

for all $r > 0$.

Using (4.51) together with the inequality (4.47) of Lemma 4.7, we obtain that, for all $t > 0$,

$$\sup_{x,y \in B} p_t^B\left(x, y\right) \geq \frac{1}{\mu\left(B\right)} \exp\left(-\frac{t}{\tau\left(\kappa r\right)}\right). \tag{4.52}$$

Denote by B' the ball $B\left(x_0, r/C_5\right)$. Applying (4.52) to the heat kernel $p_t^{B'}$, we obtain

$$\sup_{x,y \in B'} p_t^B\left(x, y\right) \geq \sup_{x,y \in B'} p_t^{B'}\left(x, y\right) \geq \frac{1}{\mu\left(B'\right)} \exp\left(-\frac{t}{\tau\left(\kappa r/C_5\right)}\right).$$

Using VD and renaming the constant κ appropriately, we can write

$$\sup_{x,y \in B'} p_t^B\left(x, y\right) \geq \frac{c}{\mu\left(B\right)} \exp\left(-\frac{t}{\tau\left(\kappa r\right)}\right). \tag{4.53}$$

Applying the Harnack inequality (3.3) in the cylinder $Q(x_0, \tau(c_4 r), r)$ to the function $u\left(t, \cdot\right) = p_t^B\left(x, \cdot\right)$ where $x \in B'$, we obtain

$$\sup_{y \in B'} p_t^B\left(x, y\right) \leq C_6 p_s^B\left(x, z\right) \tag{4.54}$$

for all $z \in B'$, $t \in \left(\tau\left(c_1 r\right), \tau\left(c_2 r\right)\right)$, and

$$s \in \left(\tau\left(c_3 r\right), \tau\left(c_4 r\right)\right). \tag{4.55}$$

Taking in (4.54) sup in $x \in B'$, we obtain

$$\sup_{x,y\in B'} p_t^B(x,y) \le C_6 \sup_{x\in B'} p_s^B(x,z),$$

which together with (4.53) yields, in the above range of z and s,

$$\sup_{x\in B'} p_s^B(x,z) \ge \frac{c'}{\mu(B)}. \tag{4.56}$$

Now we apply the Harnack inequality in the same cylinder to the function

$$u(t,\cdot) = p_{t+t_0}^B(\cdot,z)$$

where $z \in B'$ and

$$t_0 = \tau(c_3 r) - \tau(c_1 r).$$

We obtain

$$\sup_{x\in B'} p_s^B(x,z) \le C_6 p_t^B(x_0,z) \tag{4.57}$$

provided

$$s \in (t_0 + \tau(c_1 r), t_0 + \tau(c_2 r)) = (\tau(c_3 r), \tau(c_3 r) + \tau(c_2 r) - \tau(c_1 r)) \tag{4.58}$$

and

$$t \in (t_0 + \tau(c_3 r), t_0 + \tau(c_4 r)). \tag{4.59}$$

Comparison of (4.55) and (4.58) shows that there is a value of s that belongs to the intersection of these intervals. Choosing this value of s and combining (4.56) with (4.57), we obtain, for all $z \in B' = B(x, r/C_5)$ and t from (4.59),

$$p_t^{B(x_0,r)}(x_0,z) \ge \frac{c''}{\mu(B)} = \frac{c''}{V(x_0,r)}. \tag{4.60}$$

Given any ball $B(x_0,R)$ and $t>0$, apply (4.60) to the ball $B(x_0,r)$, where r is chosen to satisfy the identity

$$t = (\tau(c_3 r) - \tau(c_1 r)) + \frac{1}{2}\tau(c_3 r) + \frac{1}{2}\tau(c_4 r), \tag{4.61}$$

which ensures the validity of the inclusion (4.59). Note that the right hand side of (4.61) is a continuous function of r that takes values in the entire half-line $(0,+\infty)$ so that there exists r which satisfies (4.61).

It follows from (4.61) that

$$\tau(c_3 r) \le t \le 2\tau(c_4 r). \tag{4.62}$$

By (3.1) there is a (large) constant c_4' such that

$$2\tau(c_4 r) \le \tau(c_4' r),$$

so that (4.62) implies

$$\tau(c_3 r) \le t \le \tau(c_4' r)$$

and, hence,

$$\frac{1}{c_4'}\tau^{-1}(t) \le r \le \frac{1}{c_3}\tau^{-1}(t).$$

Choose $\varepsilon > 0$ to be so small that

$$\varepsilon \le c_3 \text{ and } \varepsilon \le (c_4' C_5)^{-1}.$$

Assuming that $t \le \tau(\varepsilon R)$ we obtain from the above two lines that $r \le R$ and

$$\frac{r}{C_5} \ge \varepsilon \tau^{-1}(t).$$

Hence, any $z \in B(x_0, \varepsilon\tau^{-1}(t))$ belongs also to $B(x_0, r/C_5)$, and we obtain from (4.60) for such z that

$$p_t^{B(x_0,R)}(x_0, z) \ge p_t^{B(x_0,r)}(x_0, z) \ge \frac{c''}{V(x_0, r)} \ge \frac{c'''}{V(x_0, \tau^{-1}(t))}, \tag{4.63}$$

which proves LLE$(\tau;\varepsilon)$.

Letting $R \to \infty$ and renaming x_0 to x and z to y, we obtain the lower bound (3.7) of the heat kernel $p_t(x, y)$. Another consequence of LLE$(\tau;\varepsilon)$, that is obtained by integrating (4.63) over $B(x_0, \varepsilon\tau^{-1}(t))$ and renaming x_0 to x, is the inequality

$$\int_{B(x,R)} p_t^{B(x,R)}(x, z)\, d\mu(z) \ge c_0, \tag{4.64}$$

which is true whenever $t \le \tau(\varepsilon R)$, with a positive constant c_0.

4.3.5 Integrated upper bound

Given the on-diagonal upper bound of the heat kernel and LLE, the proof of the upper bound in HKE can be obtained by at least two different ways: as in [17, Section 4] or as in [22, Section 5]. Here we mainly follow [22], which partially uses a probabilistic argument. A purely analytic version of that argument can be found in [16].

The main part of the proof of the off-diagonal upper bound of the heat kernel is contained in the following lemma.

Lemma 4.8 *Assume that the heat kernels p_t and p_t^B are continuous for any ball B and that the estimate* (4.64) *holds for all $x \in X$, $R > 0$ and $t \le \tau(\varepsilon R)$. Then the following is true.*
(i) There exist $c_1, c_2 > 0$ such that, for all $x \in X, t > 0$,

$$\int_X \exp\left(c_1 \frac{d(x,z)}{\tau^{-1}(t)}\right) p_t(x,z)\mu(dz) \le c_2. \tag{4.65}$$

(ii) Furthermore, for any $k \in \mathbb{N}$, we have

$$\int_X \exp\left(c_1 \frac{d(x,z)}{\tau^{-1}(t/k)}\right) p_t(x,z)\, d\mu(z) \le c_2^k. \tag{4.66}$$

Proof. We follow the proof of Lemma 5.8 and 5.9 in [22] with some improvements.

(i) Recall that, for any bounded Borel function f on X, we have the identity

$$\mathbb{E}^x[f(Y_t)] = P_t f\,(x) \tag{4.67}$$

which is true for almost all $x \in X$. However, since the right hand side has a continuous version and the left hand side is quasi-continuous, the equality holds for q.e. $x \in X$. Using [13, Lemma 7.2.4], we see that there exists $\mathcal{N}_0 \subset X$ such that

$$\mathbb{P}^x(Y_t \in \mathcal{N}_0 \ \text{ for some } t) = 0 \quad \text{ for all } \ x \in X \setminus \mathcal{N}_0 =: X',$$

and Cap $(\mathcal{N}_0) = 0$, where Cap is the 1-capacity (see [13, (2.1.2)] for definition).

For any open set $\Omega \subset X$, let T_Ω be the first exit time from Ω, that is,

$$T_\Omega := \inf\{s > 0 : Y_s \in X' \setminus \Omega\}.$$

Fix a ball $B = B\,(x, R)$ and set $B_k = B\,(x, kR)$ and $T_k = T_{B_k}$ for all $k \in \mathbb{N}$. Then we have by the strong Markov property, for any $t > 0$,

$$\mathbb{P}^x\,(T_{k+1} \le t) = \mathbb{E}^x\left[1_{\{T_k \le t\}}\mathbb{P}^{Y_{T_k}}\,(T_{k+1} \le t - T_k)\right], \quad \forall\, x \in X'$$

(see Fig. 9).

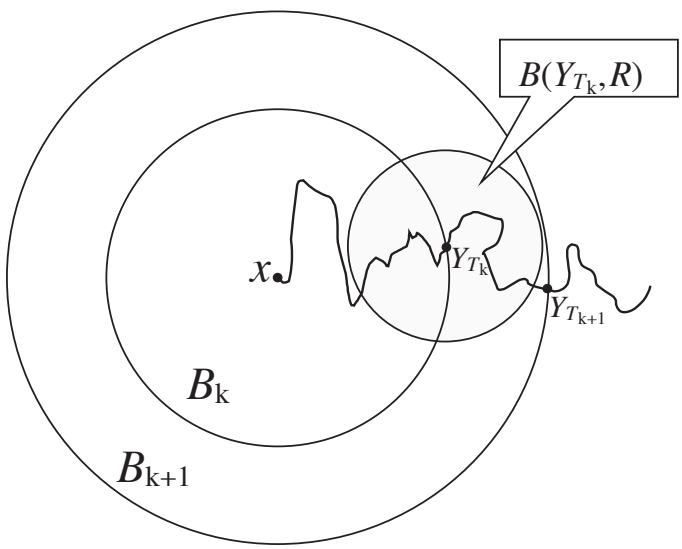

Figure 9: Exit points from the balls B_k and B_{k+1}

Since $\{Y_t\}$ is a diffusion without a killing term and $\mathbb{P}^x(Y_t \in \mathcal{N}_0,\, \exists t) = 0$, the exit point Y_{T_k} is contained in $\overline{B_k} \cap X'$ $\mathbb{P}^x$-a.s., whence it follows that $B\,(Y_{T_k}, R) \subset B_{k+1}$ and, hence,

$$\mathbb{P}^{Y_{T_k}}\,(T_{k+1} \le t - T_k) \le \mathbb{P}^{Y_{T_k}}\left(T_{B\left(Y_{T_k},R\right)} \le t\right) \le \sup_{z \in X'} \mathbb{P}^z\left(T_{B(z,R)} \le t\right).$$

Combining the above two lines, we obtain for $x \in X'$

$$\mathbb{P}^x\left(T_{k+1} \leq t\right) \leq \mathbb{P}^x\left(T_k \leq t\right) \sup_{z \in X'} \mathbb{P}^z\left(T_{B(z,R)} \leq t\right). \tag{4.68}$$

On the other hand, we have by [13, (4.1.2)]

$$\mathbb{P}^z\left(T_{B(z,R)} > t\right) = P_t^{B(z,R)} 1\left(z\right) = \int_{B(z,R)} p_t^{B(x,R)}\left(z,y\right) d\mu\left(y\right), \quad \forall\, z \in X'. \tag{4.69}$$

Assuming that $t \leq \tau\left(\varepsilon R\right)$, we obtain by (4.64) that $\mathbb{P}^z\left(T_{B(z,R)} > t\right) \geq c_0$ whence

$$\mathbb{P}^z\left(T_{B(z,R)} \leq t\right) \leq 1 - c_0.$$

Substituting into (4.68), we obtain by induction in k that

$$\mathbb{P}^x\left(T_k \leq t\right) \leq \left(1 - c_0\right)^k, \quad \forall\, x \in X'.$$

Consequently, we have for all $x \in X'$

$$P_t 1_{X' \setminus B_k}\left(x\right) = \mathbb{P}^x\left(Y_t \in X' \setminus B_k\right) \leq \mathbb{P}^x\left(T_k \leq t\right) \leq \left(1 - c_0\right)^k,$$

that is,

$$\int_{X' \setminus B_k} p_t(x,z) d\mu\left(z\right) \leq (1 - c_0)^n.$$

It follows that for all $x \in X'$

$$\begin{aligned}
& \int_X \exp\left(c \frac{d(x,z)}{R}\right) p_t(x,z) d\mu\left(z\right) \\
= & \sum_{k=0}^{\infty} \int_{(B_{k+1} \setminus B_k) \cap X'} \exp\left(c \frac{d(x,z)}{R}\right) p_t(x,z) d\mu\left(z\right) \\
\leq & \sum_{k=0}^{\infty} e^{c(k+1)} \int_{X' \setminus B_k} p_t(x,z) d\mu\left(z\right) \\
\leq & \sum_{k=0}^{\infty} e^{4c(k+1)} (1 - c_0)^k < \infty,
\end{aligned}$$

provided the constant $c > 0$ is chosen small enough. Setting in this estimate $R = \varepsilon^{-1} \tau^{-1}\left(t\right)$ and noting the continuity of $p_t(x,y)$, we obtain (4.65) for all $x \in X$.

(ii) Denote for simplicity

$$E_{t,x}\left(y\right) = \exp\left(c_1 \frac{d(x,y)}{\tau^{-1}(t)}\right).$$

The estimate (4.65) means then that, for all $t > 0$ and $x \in X$,

$$P_t E_{t,x}\left(x\right) \leq c_2. \tag{4.70}$$

Let us prove that, for all $t > 0, x, y \in X$,

$$P_t E_{t,x}(y) \leq c_2 E_{t,x}(y).$$

By the triangle inequality, we have, for all $x, y, z \in X$,

$$E_{t,x}(y) \leq E_{t,x}(z) E_{t,z}(y).$$

Considering x and z as fixed and y as variable and applying P_t, we obtain

$$P_t E_{t,x}(y) \leq E_{t,x}(z) P_t E_{t,z}(y).$$

Setting $z = y$ and using (4.70), we obtain

$$P_t E_{t,x}(y) \leq c_2 E_{t,x}(y).$$

Iterating this inequality and using once again (4.70), we obtain

$$P_{kt} E_{t,x}(x) \leq c_2^k.$$

Renaming t to t/k, we obtain (4.66). ■

4.3.6 Pointwise off-diagonal upper bound

Using the upper bound (4.42) and (3.11), we obtain

$$\begin{aligned} p_t(x,z) &\leq \frac{C}{\left(V(x,\tau^{-1}(t)) V(z,\tau^{-1}(t))\right)^{1/2}} \\ &\leq \frac{C}{V(x,\tau^{-1}(t))} \left(1 + \frac{d(x,z)}{\tau^{-1}(t)}\right)^{\gamma/2}, \end{aligned} \tag{4.71}$$

whence it follows that

$$\begin{aligned} &\int_X \exp\left(c_1 \frac{d(x,z)}{\tau^{-1}(t/k)}\right) p_t^2(x,z)\, d\mu(z) \\ \leq\ & \frac{C}{V(x,\tau^{-1}(t))} \int \exp\left(c_1 \frac{d(x,z)}{\tau^{-1}(t/k)}\right) \left(1 + \frac{d(x,z)}{\tau^{-1}(t)}\right)^{\gamma/2} p_t(x,z)\, d\mu(z). \end{aligned}$$

By reducing the constant c_1 and increasing C, the term

$$\left(1 + \frac{d(x,z)}{\tau^{-1}(t)}\right)^{\gamma/2} \leq \left(1 + \frac{d(x,z)}{\tau^{-1}(t/k)}\right)^{\gamma/2}$$

can be absorbed into the exponential. Hence, we obtain from (4.66) that

$$\int_X \exp\left(c_1 \frac{d(x,z)}{\tau^{-1}(t/k)}\right) p_t^2(x,z)\, d\mu(z) \leq \frac{C c_2^k}{V(x,\tau^{-1}(t))}.$$

Therefore, for any two points $x, y \in X$, we obtain, using the triangle inequality and the Cauchy-Schwarz inequality,

$$\begin{aligned}
p_{2t}(x,y) &= \int_X p_t(x,z)\, p_t(y,z)\, d\mu(z) \\
&\leq \int_X \exp\left(\frac{c_1}{2}\frac{d(x,z)}{\tau^{-1}(t/k)}\right) p_t(x,z) \exp\left(\frac{c_1}{2}\frac{d(y,z)}{\tau^{-1}(t/k)}\right) p_t(y,z)\, d\mu(z) \\
&\quad \times \exp\left(-\frac{c_1}{2}\frac{d(x,y)}{\tau^{-1}(t/k)}\right) \\
&\leq \left(\int_X \exp\left(c_1\frac{d(x,z)}{\tau^{-1}(t/k)}\right) p_t^2(x,z)\, d\mu(z)\right)^{1/2} \\
&\quad \times \left(\int_X \exp\left(c_1\frac{d(y,z)}{\tau^{-1}(t/k)}\right) p_t^2(y,z)\, d\mu(z)\right)^{1/2} \\
&\quad \times \exp\left(-\frac{c_1}{2}\frac{d(x,y)}{\tau^{-1}(t/k)}\right) \\
&\leq \frac{Cc_2^k}{\left(V(x,\tau^{-1}(t))\, V(y,\tau^{-1}(t))\right)^{1/2}} \exp\left(-\frac{c_1}{2}\frac{d(x,y)}{\tau^{-1}(t/k)}\right).
\end{aligned}$$

Using again (3.11) as in (4.71), reducing again the constant c_1, and renaming $2t$ to t, we obtain

$$p_t(x,y) \leq \frac{Cc_2^k}{V(x,\tau^{-1}(t))} \exp\left(-c_1\frac{d(x,y)}{\tau^{-1}(t/k)}\right). \tag{4.72}$$

Let us now choose k as follows. Set for simplicity $r = d(x,y)$ and assume first that $\tau(r) \geq t$. Using (3.2), we obtain

$$\begin{aligned}
c_2^k \exp\left(-\frac{c_1 r}{\tau^{-1}(t/k)}\right) &\leq \exp\left(k\log c_2 - c_1\left(\frac{\tau(r)}{Ct/k}\right)^{1/\beta_2}\right) \\
&= \exp\left(c'k - c''\left(\frac{\tau(r)}{t}\right)^{1/\beta_2} k^{1/\beta_2}\right)
\end{aligned}$$

with the obvious meaning of the new constants c' and c''. We would like to choose k to satisfy the inequality

$$c'k \leq \frac{1}{2}c''\left(\frac{\tau(r)}{t}\right)^{1/\beta_2} k^{1/\beta_2},$$

that is,

$$k \leq c'''\left(\frac{\tau(r)}{t}\right)^{\frac{1}{\beta_2-1}}$$

where $c''' = \left(\frac{c''}{2c'}\right)^{\beta_2/(\beta_2-1)}$. If the ratio $\frac{\tau(r)}{t}$ is larger than a certain constant then such a positive integer k exists; choose k to be maximal possible so that

$$k \simeq \left(\frac{\tau(r)}{t}\right)^{\frac{1}{\beta_2-1}}.$$

Then (4.72) implies

$$p_t(x,y) \le \frac{C}{V(x,\tau^{-1}(t))} \exp\left(-c\left(\frac{\tau(r)}{t}\right)^{\frac{1}{\beta_2-1}}\right). \tag{4.73}$$

Finally, if $\tau(r)/t$ is bounded then (4.73) trivially follows from (4.72) with $k=1$.

By that, the proof of Theorem 3.1 is finished.

5 Proof of Theorem 3.2

Lemma 5.1 (i) s-HKE(τ) *implies* VD.
(ii) s-PHI(τ) *implies* VD.

Proof. (i) By definition of s-HKE(τ), (3.7) holds for every $\varepsilon \in (0,\infty)$. Assuming that $\varepsilon > 1$ and integrating (3.7) over $B(x,\varepsilon\tau^{-1}(t))$, we obtain

$$\frac{c_3 V(x,\varepsilon\tau^{-1}(t))}{V(x,\tau^{-1}(t))} \le \int_{B(x,\varepsilon\tau^{-1}(t))} p_t(x,y)\mu(dy) \le 1.$$

Since $\varepsilon > 1$ and $t > 0$, $x \in X$ are arbitrary, this implies VD.
(ii) Note that (4.63) and (4.42) control $p_T(x_0,x_0)$ from above and below in terms of the volume of balls by taking $y = x_0$. Recalling (4.36), (4.43) and (3.2), we see that $c = 2^{1-1/\beta_1}/(C_1+C_2)$ in (4.42), so we can take $c \ge 2$ by taking C_1+C_2 small. s-PHI(τ) enables these choices of constants and thus implies VD. ■

Remark. As the proof of (i) shows, if (3.7) holds with $\varepsilon > 1$, then VD is satisfied.

Given Theorem 3.1 and Lemma 5.1, it is enough to prove the following proposition to complete the proof of Theorem 3.2. Although the proof consists of a standard chaining argument, we reproduce it for readers' convenience.

Proposition 5.2 *Under the hypotheses of* Theorem 3.2*, the following hold.*
(i) VD *and* w-HKE(τ) *imply* s-HKE(τ).
(ii) VD *and* w-LLE(τ) *imply* s-LLE(τ).
(iii) s-HKE(τ) *implies* f-HKE(τ).
(iv) w-PHI(τ) *implies* s-PHI(τ).

Proof. (i) We assume that HKE($\tau;\varepsilon_0$) holds for some $\varepsilon_0 > 0$, and will prove HKE($\tau;\varepsilon$) for any fixed $\varepsilon > \varepsilon_0$. Put

$$a = \left(\frac{3\varepsilon}{\varepsilon_0}\right)^{\beta_1/(\beta_1-1)},$$

and $n = \lceil a \rceil$. Then by (3.12) we have, for any $t > 0$,

$$\frac{\tau^{-1}(t)}{n\tau^{-1}(t/n)} \le \frac{1}{n} n^{1/\beta_1} \le \frac{\varepsilon_0}{3\varepsilon}. \tag{5.1}$$

Now let $t > 0$, and $x, y \in X$ satisfy $d(x,y) \le \varepsilon\tau^{-1}(t)$. Then as the metric d is geodesic, there exists a chain $\{x_i\}_{i=0}^n$ such that $x_0 = x, x_n = y$ and $d(x_i, x_{i+1}) = d(x,y)/n$ for $i = 0, 1, \cdots, n-1$. Let $r = \varepsilon\tau^{-1}(t)/n$ and $s = t/n$. Then by (5.1) we have

$$3r \le \frac{3\varepsilon\tau^{-1}(t)}{n} \le \varepsilon_0\tau^{-1}(t/n) = \varepsilon_0\tau^{-1}(s).$$

We also have by (3.12)

$$\frac{\tau^{-1}(s)}{r} = \frac{n\tau^{-1}(t/n)}{\varepsilon\tau^{-1}(t)} \le \frac{n}{\varepsilon}\left(\frac{C}{n}\right)^{1/\beta_2} \le \frac{(1+a)^{1-1/\beta_2}C^{1/\beta_2}}{\varepsilon}. \tag{5.2}$$

By VD, there exists a constant $b > 0$ such that

$$V(z, \tau^{-1}(s)) \le b^{-1}V(z,r)$$

for all $z \in X$. Thus, by HKE$(\tau; \varepsilon_0)$ we have

$$p_s(z_i, z_{i+1}) \ge \frac{c_1}{V(z_i, \tau^{-1}(s))} \ge \frac{c_1 b}{V(z_i, r)}. \tag{5.3}$$

for $\mu \times \mu$ almost all $(z_i, z_{i+1}) \in B(x_i, r) \times B(x_{i+1}, r)$. Therefore

$$\begin{aligned} p_t(x,y) &= \int_X \cdots \int_X p_s(x,z_1)p_s(z_1,z_2)\cdots p_s(z_{n-1},y)\mu(dz_{n-1})\cdots\mu(dz_1) \\ &\ge \int_{B(x_1,r)} \cdots \int_{B(x_{n-1},r)} p_s(x,z_1)\cdots p_s(z_{n-1},y)\mu(dz_{n-1})\cdots\mu(dz_1) \\ &\ge \frac{c_1}{V(x,\tau^{-1}(s))}\prod_{i=1}^{n-1}\left(\frac{c_1}{V(x_i,\tau^{-1}(s))}\cdot V(x_i,r)\right) \ge \frac{c_1^n b^{n-1}}{V(x,\tau^{-1}(s))}. \end{aligned} \tag{5.4}$$

Since $s = t/n \le t$, this gives the required bound.

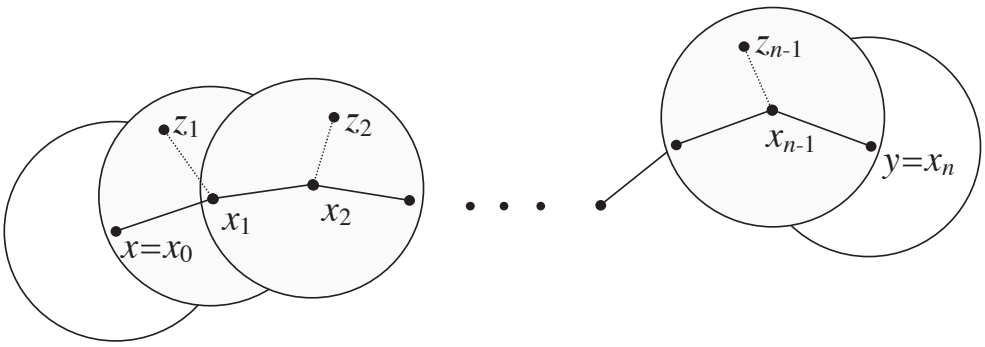

Figure 10: Sequence of balls $B(x_i, s)$

(ii) The proof is very similar to (i): note that as the metric d is geodesic the chain x_i does not leave the ball $B(x, d(x,y))$.

(iii) We have that HKE$(\tau,3)$ holds. Let $x,y\in X$ and $t>0$, and let $R=d(x,y)$. If $\tau(R)/t\le 1$ there is nothing to prove, so we assume $\tau(R)/t>1$.

For $n\ge 1$ let $r_n=R/n$ and $s_n=t/n$. Let

$$a_n=\frac{r_n}{\tau^{-1}(s_n)}=\frac{R/n}{\tau^{-1}(t/n)}.$$

By (3.2) we have $\lim_n a_n=0$; let N be the smallest integer so that $a_N<1$. As $a_1>1$, we have $N\ge 2$. By (3.2)

$$\frac{a_{n+1}}{a_n}=\frac{n\tau^{-1}(t/n)}{(n+1)\tau^{-1}(t/(n+1))}\ge\frac{n}{n+1}\Big(\frac{n+1}{Cn}\Big)^{1/\beta_1}\ge c_2>0,$$

where c_2 depends only on the function τ. We thus deduce that $c_2\le a_N<1$, which implies that

$$c_2\tau^{-1}(s_N)\le r_N<\tau^{-1}(s_N).$$

As in (i) we now construct a chain $x=z_0,z_1,\dots,z_N=y$ with $d(z_{i-1},z_i)=R/N$ for each i. We have

$$V(z,\tau^{-1}(s_N))\le V(z,c_2^{-1}r_N)<bV(z,r_N),$$

where b depends only on c_2 and the constant in VD.

We can therefore use (5.4) to obtain

$$p_t(x,y)\ge\frac{c_4^N}{V(x,\tau^{-1}(t/N))}\ge\frac{\exp(-c_5N)}{V(x,\tau^{-1}(t))}. \tag{5.5}$$

Now since $a_N\asymp 1$, we have $\tau(R/N)\asymp t/N$. So using (3.2)

$$\frac{\tau(R)}{t}\ge c\frac{\tau(R)}{N\tau(R/N)}\ge c'N^{-1}N^{\beta_1}.$$

This gives $N\le c(\tau(R)/t)^{1/(\beta_1-1)}$, and combining this with (5.5) this gives the lower bound needed for f-HKE.

(iv) Assume that w-PHI(τ) holds with constants $C_1,\cdots,C_6$ and take arbitrary constants

$$0<C_1'<C_2'<C_3'<C_4',\quad C_5'>1,\qquad C_6'>0.$$

Let

$$c_1''=\frac{C_1+C_2}{2}\quad\text{and}\quad c_3''=\frac{C_3+C_4}{2}.$$

Let $x_0\in X$, $R>0$, and $u=u(t,x)$ be a non-negative caloric function in $Q(x_0,\tau(C_4'R),C_5'R)$. Define the cylinders

$$\begin{aligned}Q_{-,R}(s,x)&=(s+\tau(C_1R),s+\tau(C_2R))\times B(x,R)\\ Q_{+,R}(s,x)&=(s+\tau(C_3R),s+\tau(C_4R))\times B(x,R)\\ Q'_{-,R}&=(\tau(C_1'R),\tau(C_2'R))\times B(x_0,R)\\ Q'_{+,R}&=(\tau(C_3'R),\tau(C_4'R))\times B(x_0,R)\end{aligned}$$

and choose arbitrarily points

$$(s,x) \in Q'_{-,R}, \qquad (s',x') \in Q'_{+,R}.$$

We will compare $u(s,x)$ and $u(s',x')$ by taking a chain $\{(s_i,x_i)\}_{i=0}^N$ where

$$(s_0,x_0) = (s,x), \quad (s_N,x_N) = (s',x')$$

and, for $i = 0, \cdots, N-1$,

$$(s_i,x_i) \in Q_{-,r}(\bar{s}_i,\bar{x}_i), \quad (s_{i+1},x_{i+1}) \in Q_{+,r}(\bar{s}_i,\bar{x}_i), \quad d(x_i,x_{i+1}) < r,$$

where

$$(\bar{s}_i,\bar{x}_i) \in Q(x_0,\tau(C'_4R),C'_5R).$$

As d is geodesic such a choice of chain is possible when

$$\frac{2R}{N} \le r \ \text{ and } \ s_{i+1} = s_i + \tau(c''_3r) - \tau(c''_1r).$$

So, let us choose $N = [2R/r]+1$. By the w-PHI(τ), we have

$$u(s_i,x_i) \le Cu(s_{i+1},x_{i+1}),$$

so we can obtain $u(s,x) \le C'u(s',x')$, where C' is independent of the choice of u and R, provided the following inequality holds

$$(\tau(c''_3r) - \tau(c''_1r))N \le \tau(C_3R) - \tau(C_2R). \tag{5.6}$$

By (3.12) we have

$$\tau(C_3R) - \tau(C_2R) = \left(\frac{\tau(C_3R)}{\tau(C_2R)} - 1\right)\tau(C_2R) \ge \left(\left(\frac{C_3}{C_2}\right)^{\beta_1} - 1\right)\tau(C_2R)$$

and, for any $0 < \kappa < C_2$,

$$\tau(C_2R) \ge \left(\frac{C_2}{\kappa}\right)^{\beta_1}\tau(\kappa R).$$

Combining these inequalities and choosing κ small enough, we obtain

$$\tau(C_3R) - \tau(C_2R) \ge \tau(\kappa R).$$

Hence, (5.6) is satisfied provided

$$\tau(c''_3r)\frac{3R}{r} \le \tau(\kappa R),$$

which is by (3.12) the case if $\frac{R}{r}$ is large enough. ■

Remark. (i) We say that a metric space (X,d) satisfies the chain condition if there exists $C > 0$ such that, for all $x,y \in X$ and any $n \in \mathbb{N}$, there exists a

sequence $\{x_i\}_{i=0}^n \subset X$ such that $x_0 = x, x_n = y$ and $d(x_i, x_{i+1}) \leq Cd(x,y)/n$ for all $i = 0, 1, \cdots, n-1$. Clearly a geodesic space satisfies the chain condition. We note that Proposition 5.2 (i,iii) hold under the chain condition by the same proof as above. However, Proposition 5.2 (ii,iv) does not hold under the chain condition. Indeed the example in Section 6 (see Fig. 11) satisfies the chain condition, VD, and w-PHI(τ) with $\tau(r) = r^2$ (so it satisfies w-LLE(τ) by Theorem 3.1), but it does not satisfy s-LLE(τ) nor s-PHI(τ).

(ii) Let $q \geq 1$. We say that a metric space (X, d) satisfies $UA(q)$, if the following holds: for all $0 < r < R$ and $x, y \in X$ such that $d(x,y) < R$, there is a sequence $\{x_i\}_{i=0}^n$ with

$$n \leq C \left(\frac{R}{r}\right)^q,$$

such that $x_i \in B(x, R)$ for all $i = 0, ..., n$, $x_0 = x, x_n = y$, $d(x_i, x_{i+1}) < r$ for all $i = 0, ..., n-1$. (Note that because of the requirement $x_i \in B(x, R)$, the hypothesis $(UA(q))$ with $q = 1$ is stronger than the chain condition.) It can be proved that if $(UA(q))$ holds with $q < \beta_1$, then Proposition 5.2 and so Theorem 3.2 hold by modifying the definition of f-HKE(τ) so that (3.9) holds with some exponent $\alpha > 0$ instead of $1/(\beta_2 - 1)$.

6 Example

We give here an example that satisfies w-PHI(τ) but not s-PHI(τ).

Consider the following 2-dimensional Riemannian manifold X embedded in $\mathbb{R}^3$ (see Fig. 11) equipped with the 3-dimensional Euclidean distance, which is not geodesic in X.

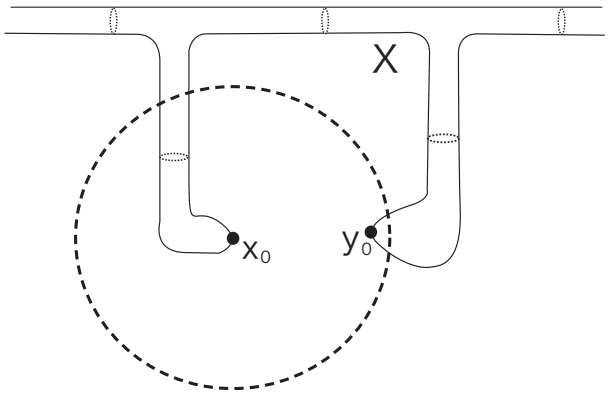

Figure 11: Example that satisfies w-PHI(τ) but not s-PHI(τ)

Let $x_0, y_0 \in X$ be the points that attains minimum distance around two ends of X. Note that VD holds for this example. s-HKE(τ) holds as well for $\tau(r) = r^2$, since f-HKE(τ) holds for the Riemannian metric D that is geodesic, and $D(x,y) \asymp d(x,y)$ in X. Thus, by Theorem 3.1, w-PHI(τ) holds. However, $B(x_0, d(x_0, y_0) + \varepsilon)$ is not

connected for small $\varepsilon > 0$. A function which is 1 in the connected component of x_0 in $B(x_0, d(x_0, y_0) + \varepsilon)$ and 0 otherwise is a caloric function in $B(x_0, d(x_0, y_0) + \varepsilon)$ – cf. Example 2.1 (ii). So s-PHI(τ) cannot hold in this example.

Acknowledgments. The authors thank R.F. Bass, Z.Q. Chen, W. Hansen, J. Hu, K.T. Sturm, and M. Takeda for valuable comments and discussions.

References

[1] D.G. Aronson, *Bounds for the fundamental solution of a parabolic equation*, Bull. Amer. Math. Soc. 73 (1967), pp.890–896.

[2] D.G. Aronson and J. Serrin, *Local behaviour of solutions of quasilinear parabolic equations*, Arch. Rat. Mech. Anal. 25 (1967), pp. 81-122.

[3] M.T. Barlow, *Diffusions on fractals*, Lect. Notes Math. 1690, pp. 1–121, Springer, 1998.

[4] M.T. Barlow and R.F. Bass, *The construction of the Brownian motion on the Sierpisnki carpet*, Ann. Inst. H. Poincaré 25 (1989), pp.225-257.

[5] M.T. Barlow, R.F. Bass, Z.-Q. Chen, M. Kassmann, *Non-local Dirichlet forms and symmetric jump processes*, Trans. Amer. Math. Soc. 361 (2009), pp. 1963–1999.

[6] M.T. Barlow, R.F. Bass and T. Kumagai, *Stability of parabolic Harnack inequalities on metric measure spaces*, J. Math. Soc. Japan 58 (2006), pp. 485–519.

[7] M.T. Barlow and E.A. Perkins, *Brownian motion on the Sierpinski gasket*, Probab. Th. Rel. Fields 79 (1988), pp. 543–623.

[8] E.A. Carlen, S. Kusuoka and D.W. Stroock, *Upper bounds for symmetric Markov transition functions*, Ann. Inst. H. Poincaré Probab. Statist. 23 (1987), pp. 245–287.

[9] T. Coulhon and A. Grigor'yan, *On-diagonal lower bounds for heat kernels on non-compact manifolds and Markov chains* Duke Math. J. 89 (1997), pp. 133–199.

[10] E.B. Davies, *Heat kernels and spectral theory*, Cambridge University Press, 1989.

[11] E.B. Fabes and D.W. Stroock, *A new proof of Moser's parabolic Harnack inequality using the old ideas of Nash*, Arch. Mech. Rat. Anal. 96 (1986), pp. 327–338.

[12] P.J. Fitzsimmons, B.M. Hambly and T. Kumagai, *Transition density estimates for Brownian motion on affine nested fractals*, Comm. Math. Phys. 165 (1994), pp. 595–620.

[13] M. Fukushima, Y. Oshima and M. Takeda, *Dirichlet Forms and Symmetric Markov Processes*, de Gruyter, Berlin, 1994.

[14] A. Grigor'yan, *The heat equation on non-compact Riemannian manifolds*, Matem. Sbornik, 182 (1991), pp.55–87 (in Russian). Engl. transl.in Math. USSR Sb. 72 (1992), pp. 47–77.

[15] A. Grigor'yan and J. Hu, *Off-diagonal upper estimates for the heat kernel of Dirichlet forms on metric spaces*, Invent. Math. 174 (2008), pp. 81–126.

[16] A. Grigor'yan and J. Hu, *Upper bounds of heat kernels on doubling spaces*, preprint.

[17] A. Grigor'yan, J. Hu and K.-S. Lau, *Obtaining upper bounds of heat kernels from lower bounds*, Comm. Pure Appl. Math. 61 (2008), pp. 639–660.

[18] A. Grigor'yan, J. Hu and K.-S. Lau, *Heat kernels on metric spaces with doubling measure*, to appear in Proceedings of Fractal Conference in Greifswald IV, Progress in Probability 61, Birkhäuser, 2009, pp. 3–44.

[19] A. Grigor'yan and A. Telcs, *Harnack inequalities and sub-Gaussian estimates for random walks*, Math. Annalen 324 (2002), pp. 521–556.

[20] A.K. Gushchin, *On the uniform stabilization of solutions of the second mixed problem for a parabolic equation* Matem. Sbornik 119 (1982), pp.451–508 (in Russian). Engl. transl.in Math. USSR Sb. 47 (1984), pp. 439–498.

[21] B.M. Hambly and T. Kumagai, *Transition density estimates for diffusions on p.c.f. fractals*, Proc. London Math. Soc. 78 (1999), pp. 431–458.

[22] W. Hebisch and L. Saloff-Coste, *On the relation between elliptic and parabolic Harnack inequalities*, Ann. Inst. Fourier (Grenoble) 51 (2001), pp. 1437–1481.

[23] J. Hu, *On parabolic Harnack inequality*, preprint.

[24] N.V. Krylov and M.V. Safonov, *A certain property of solutions of parabolic equations with measurable coefficients* Izv. Akad. Nauk SSSR 44 (1980) pp. 81-98 (in Russian). Engl. transl. in Math. USSR Izvestija 16 (1981), pp. 151-164.

[25] E.M. Landis, *The second order equations of elliptic and parabolic type* (in Russian) Nauka, Moscow, 1971. Engl. transl. in: Transl. of Mathematical Monographs 171, AMS, 1998.

[26] P. Li and S.-T. Yau, *On the parabolic kernel of the Schrödinger operator* Acta Math. 156 (1986), pp.153–201.

[27] N. Littman, G. Stampaccia and H.F. Weinberger, *Regular points for elliptic equations with discontinuous coefficients*, Ann. Scuola Norm. Sup. Pisa (3) 17 (1963), pp.43–77.

[28] J. Moser, *On Harnack's theorem for elliptic differential equations*, Comm. Pure Appl. Math. 14 (1961), pp. 577–591.

[29] J. Moser, *A Harnack inequality for parabolic differential equations*, Comm. Pure Appl. Math. 17 (1964), pp. 101–134.

[30] Y. Oshima, *Lecture notes on Dirichlet forms*, Unpublished lecture notes.

[31] L. Saloff-Coste, *A note on Poincaré, Sobolev, and Harnack inequalities*, Inter. Math. Res. Notices 2 (1992), pp. 27–38.

[32] L. Saloff-Coste, *Aspects of Sobolev-Type inequalities*, Lond. Math. Soc. Lect. Notes 289, Cambridge Univ. Press, 2002.

[33] K.-T. Sturm, *Analysis on local Dirichlet spaces -III. The parabolic Harnack inequality*, J. Math. Pures Appl. 75 (1996), pp. 273-297.

[34] J.-A. Yan *A formula for densities of transition functions*, *Sem. Prob. XXII*, Lecture Notes Math. 1321, pp. 92-100.