Suppose OB’ > 2c’

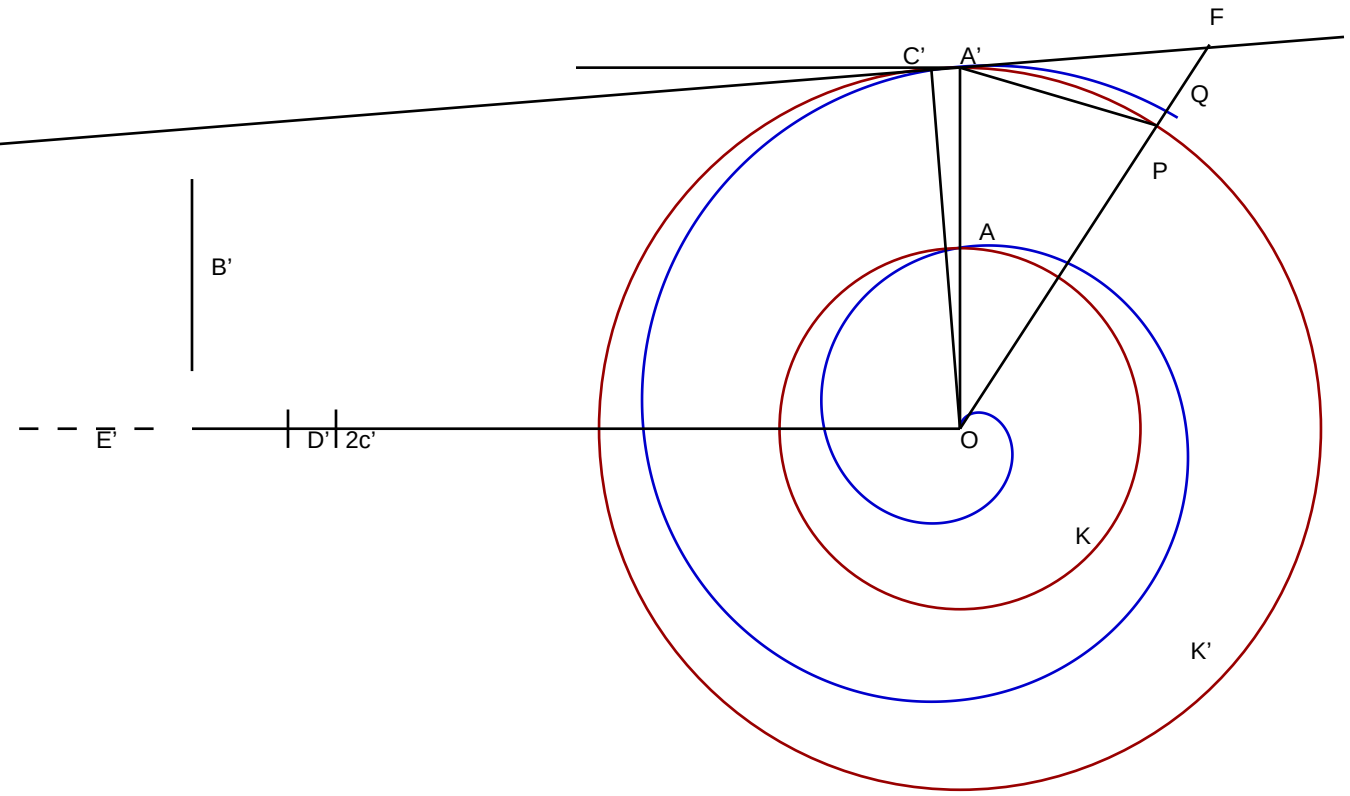

Choose D’, such that

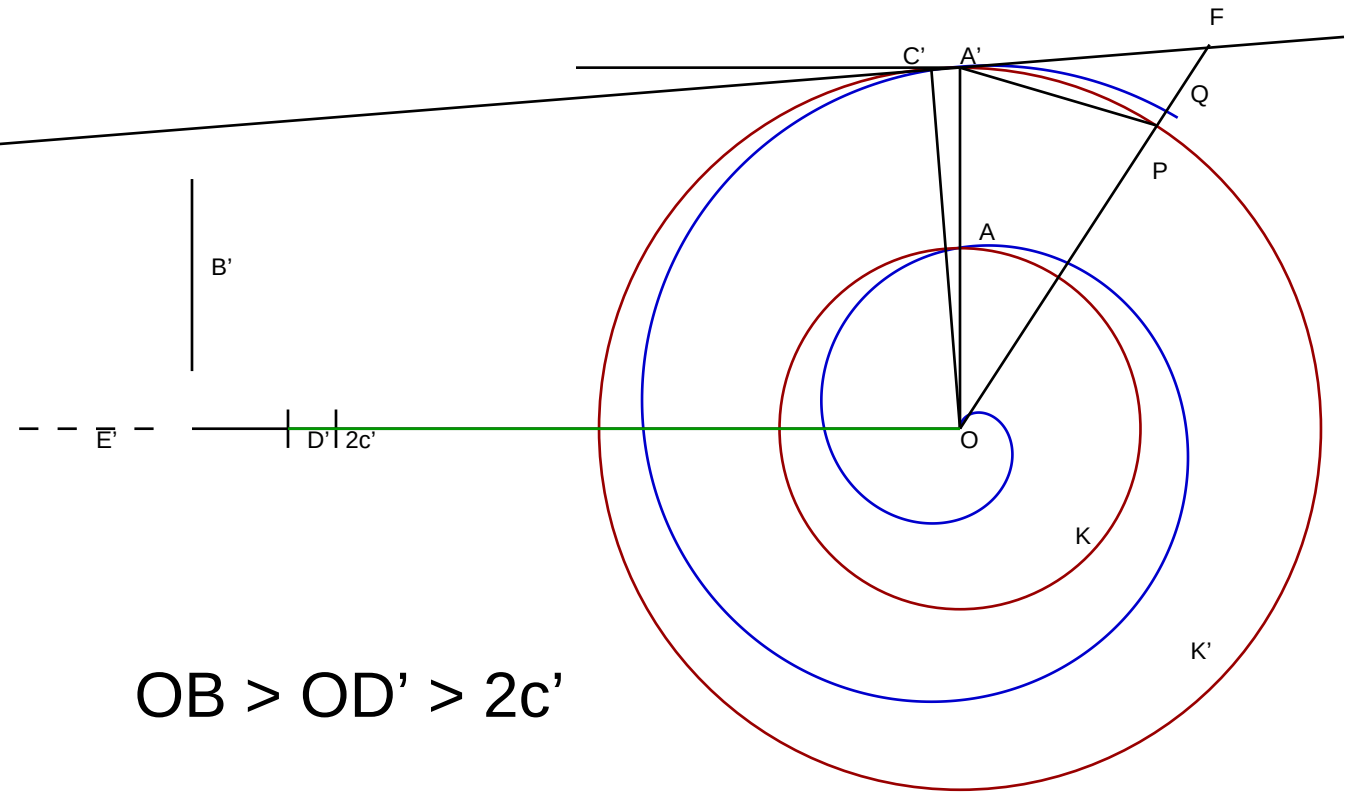

OB > OD’ > 2c’

As in first circle,

draw OPF such that

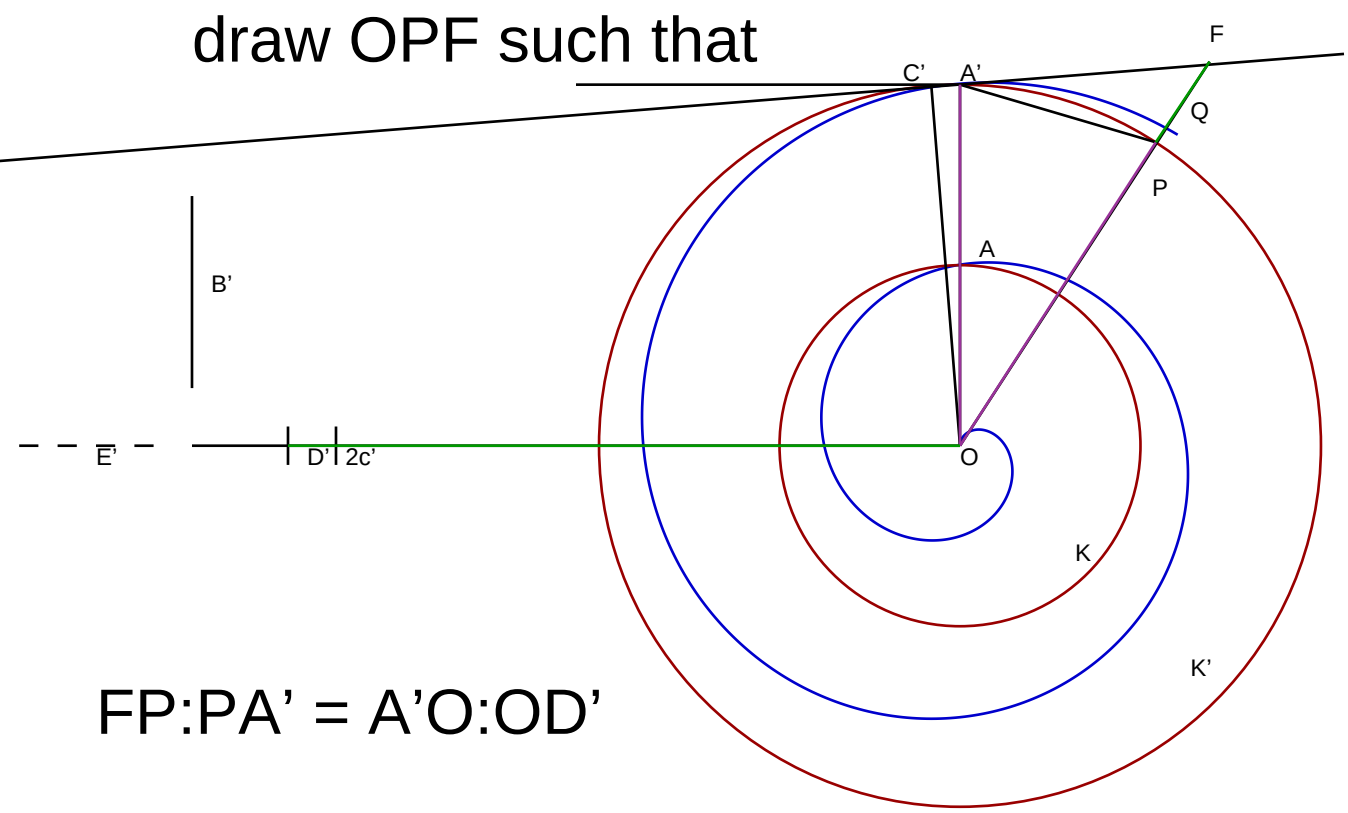

FP:PA' = A'O:OD'

FP:PA’ = A’O:OD’

Since A’O = PO,

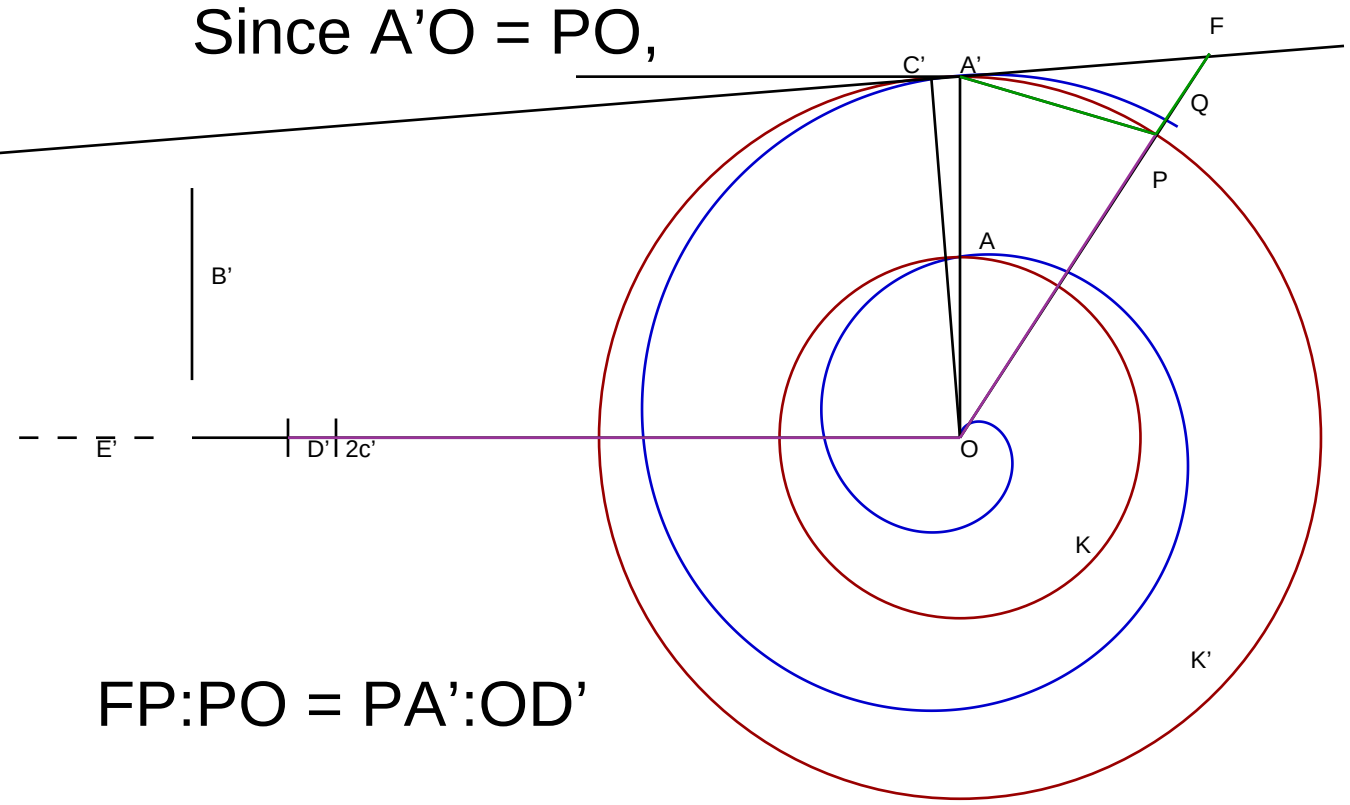

FP:PO = PA’:OD’

FP:PO = PA':OD

Because arc A'P > A'P

and OD' > 2c'

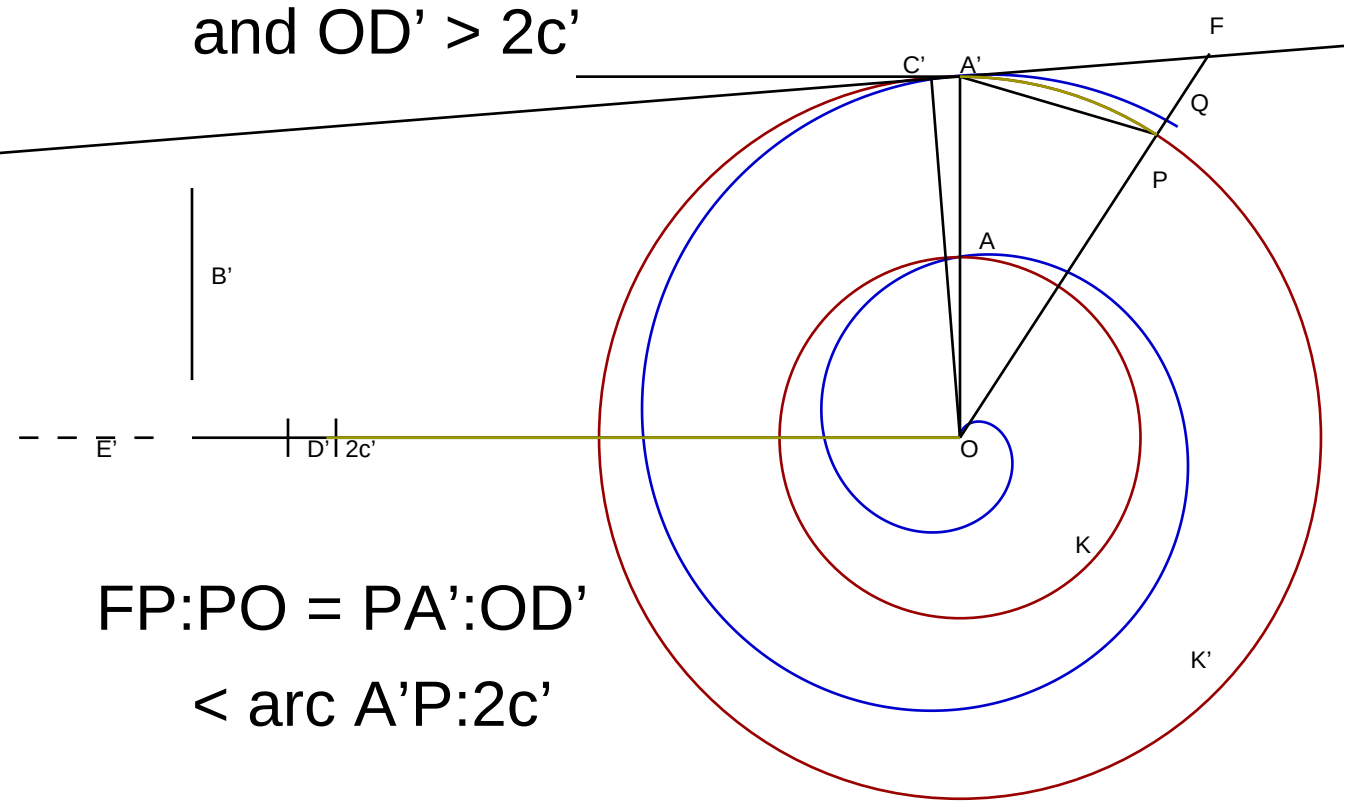

FP:PO = PA':OD'

< arc A'P:2c'

FP:PO = PA':OD' < arc A'P:2c'

Therefore, FO:PO <

(2c' + arc A'P):2c' < OQ:OA'

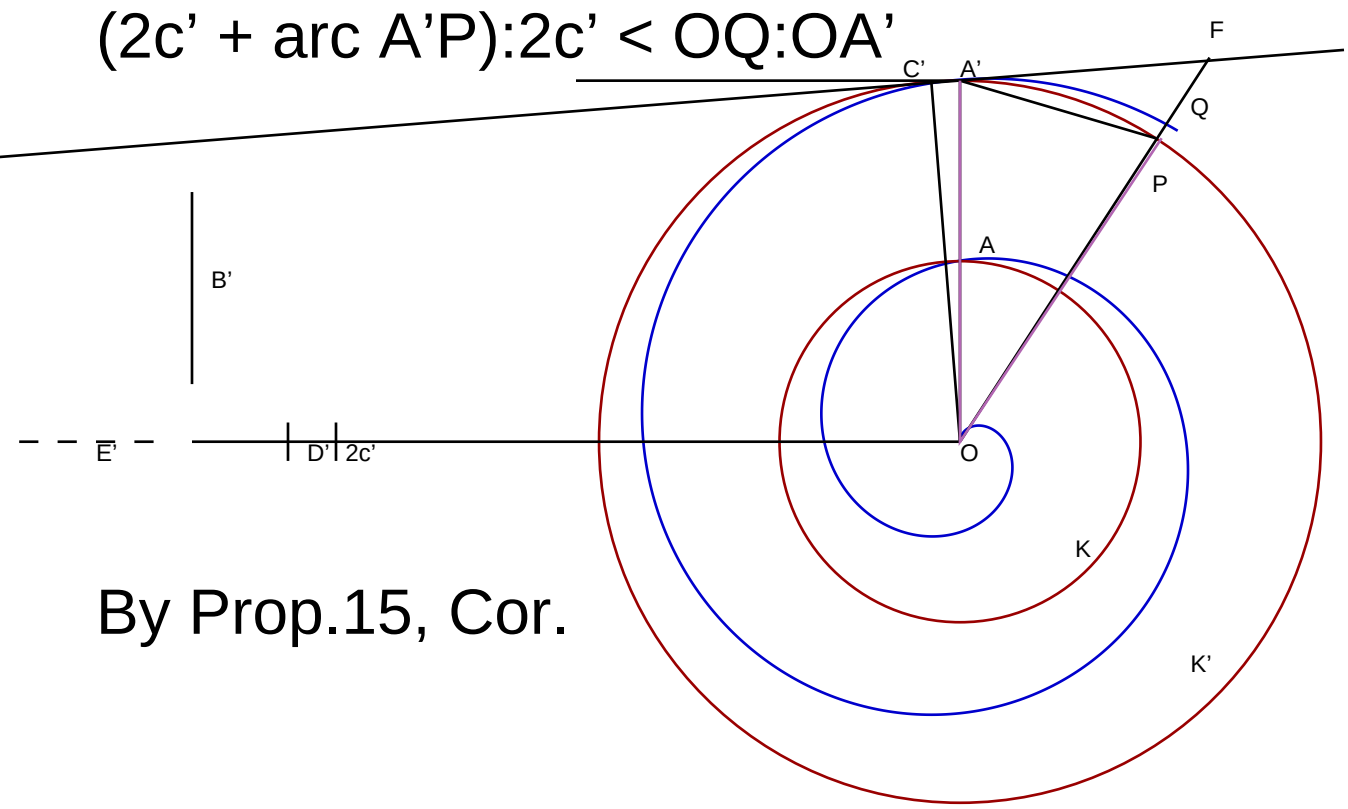

By Prop.15, Cor.

FO:PO < (2c’ + arc A’P):2c’ < OQ:OA’

Hence, FO < OQ

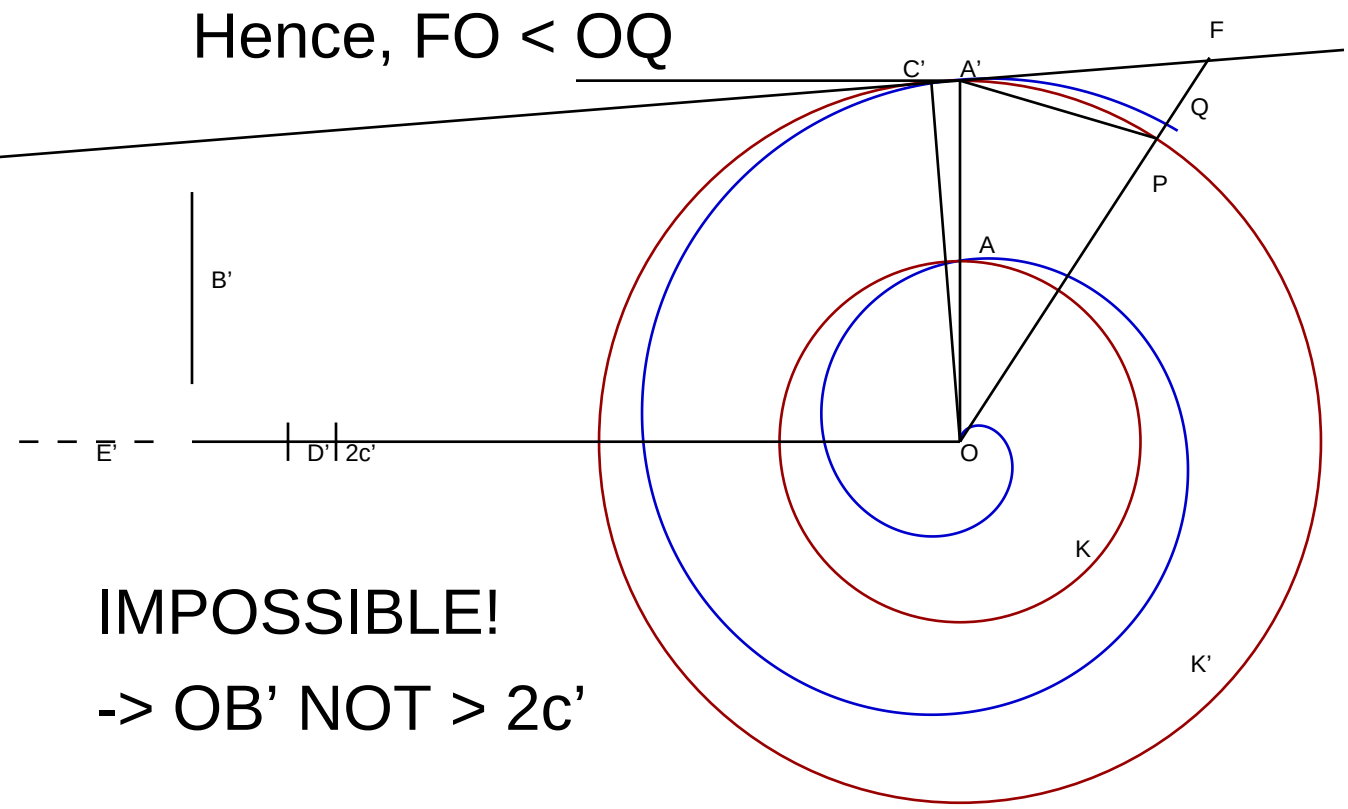

IMPOSSIBLE!

-> OB’ NOT > 2c’