Suppose OB’ < 2c’

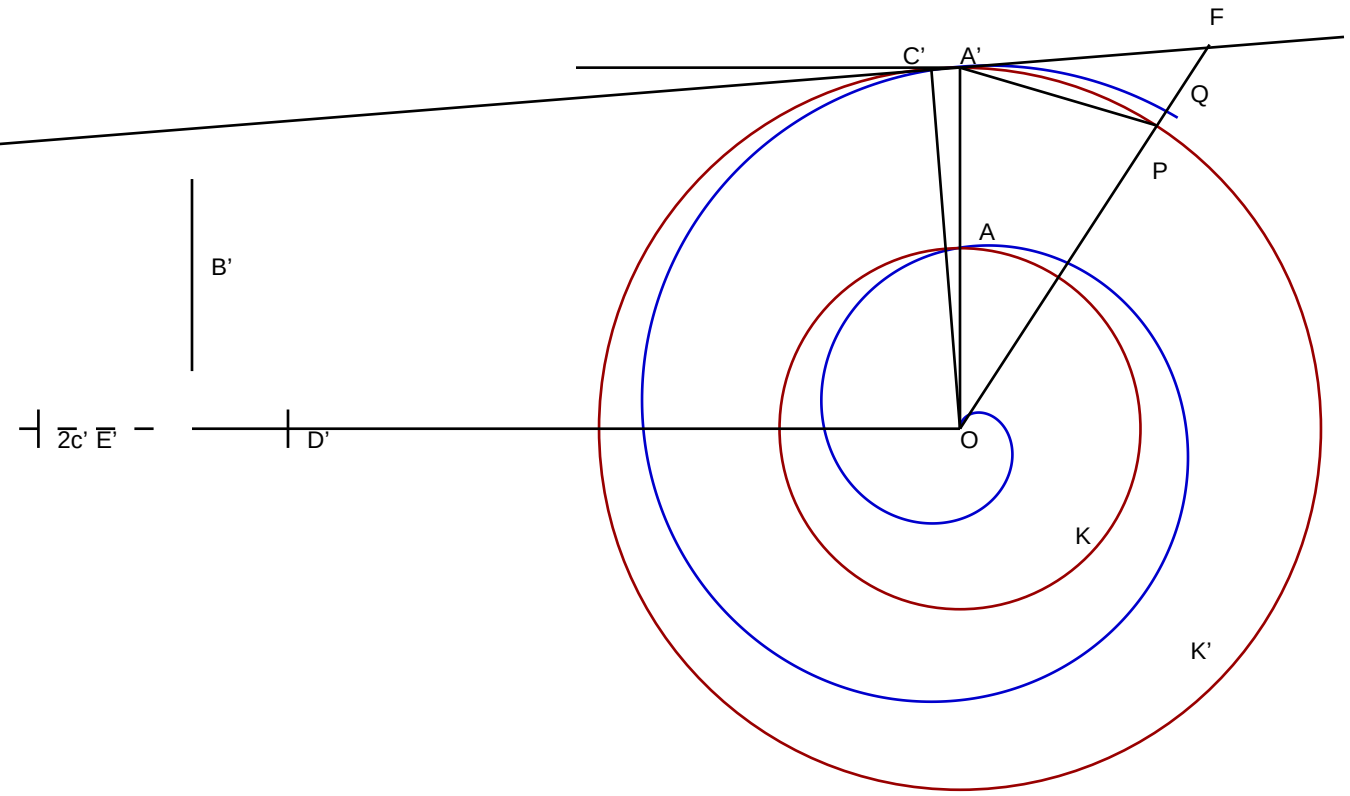

OB NOT < 2c’

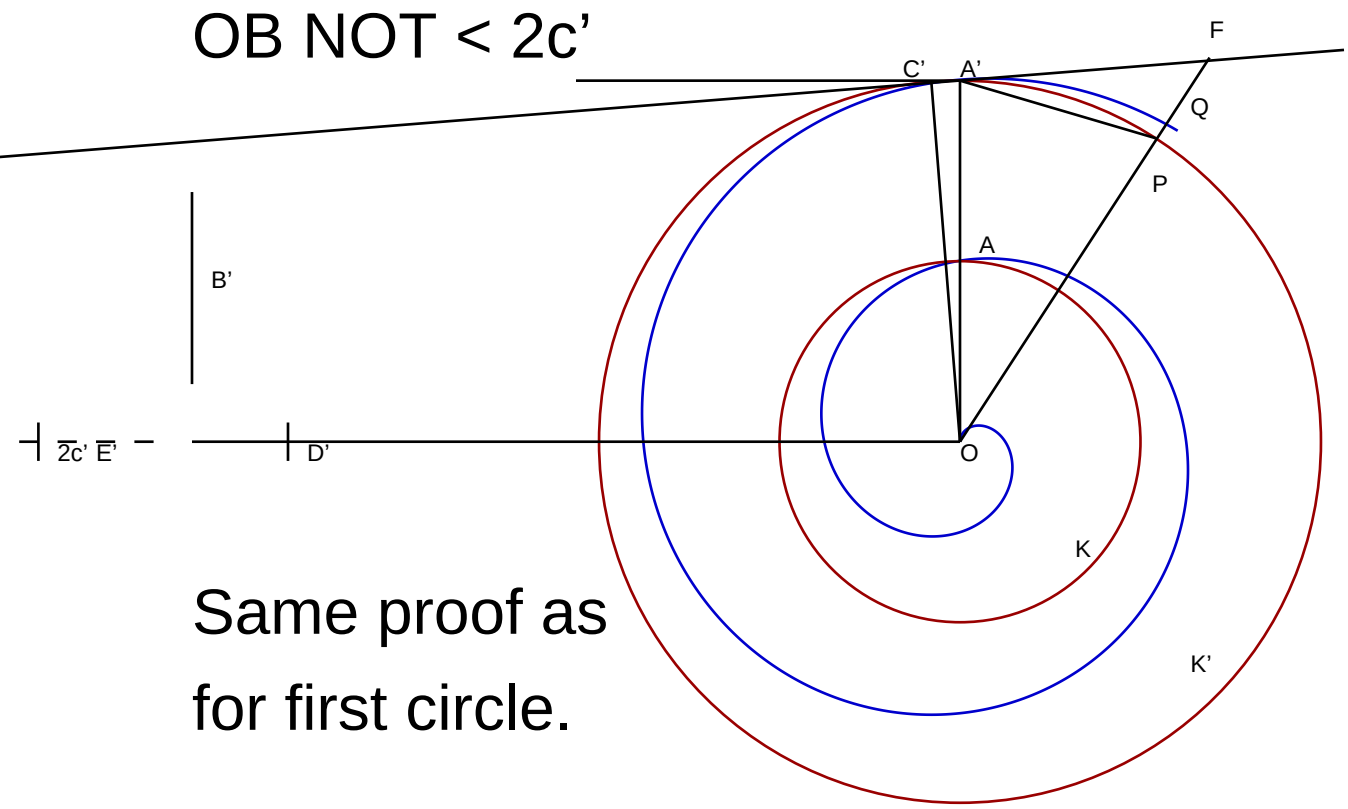

Same proof as for first circle.