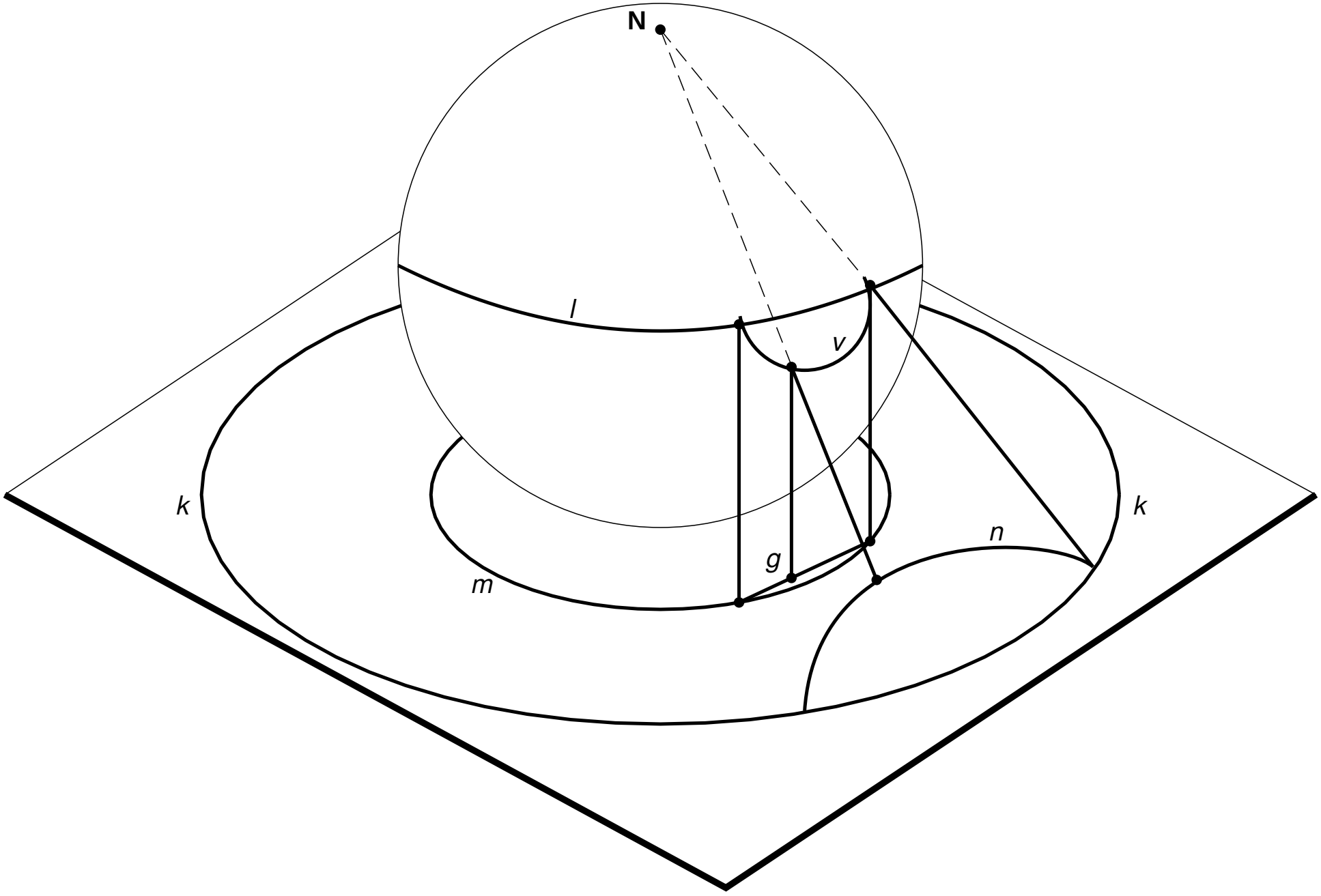
N
l
v
k
k
n
g
m