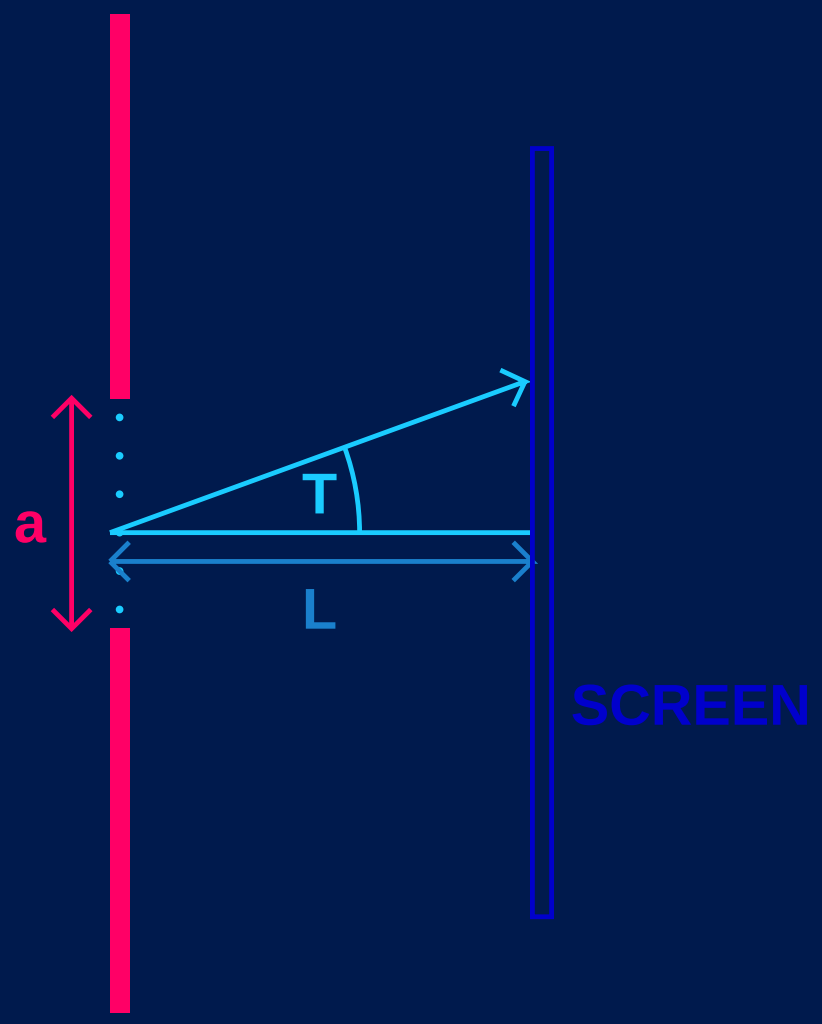
a
T
L
SCREEN